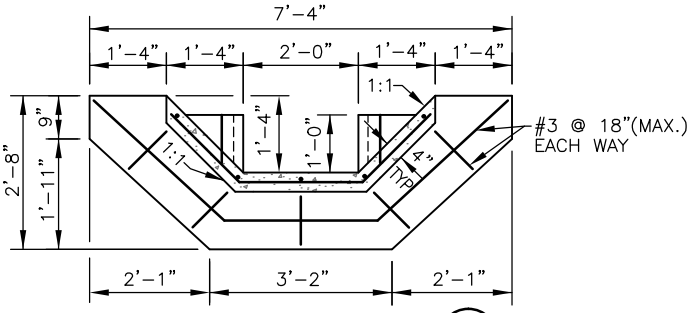

SECTIONAL ELEVATION (A/1.1)
NO SCALE

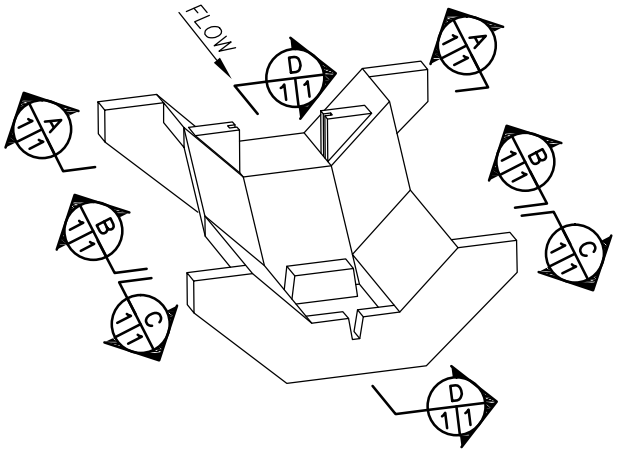

OBLIQUE VIEW

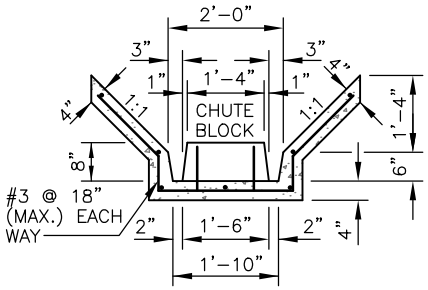

SECTION (B/1.1)
NO SCALE
(DETAIL OF CHUTE BLOCK)

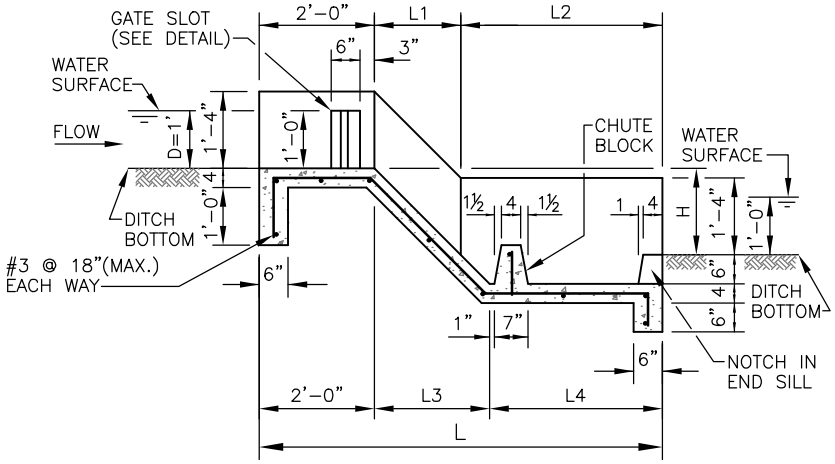

SECTIONAL ELEVATION (D/1.1)
NO SCALE

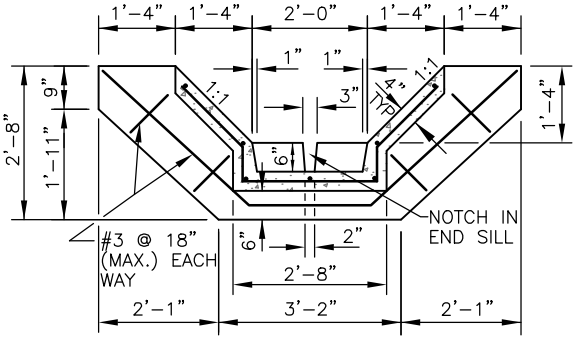

SECTIONAL ELEVATION (C/1.1)
NO SCALE

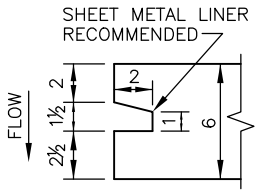

PLAN SHOWING GATE SLOT DETAIL

TABLE OF DIMENSIONS, QUANTITIES AND CAPACITIES

H FT-IN	L FT-IN	L1 FT-IN	L2 FT-IN	L3 FT-IN	L4 FT-IN	CONCRETE (CU. YDS.)	REIN. STEEL (LBS.)	Q C.F.S.
0-6	5-0	0-6	2-6	1-0	2-0	0.77	NONE	5.0
0-9	5-9	0-9	3-0	1-3	2-6	0.84	NONE	5.7
1-0	6-0	1-0	3-0	1-6	2-6	0.86	NONE	6.0
1-6	7-0	1-6	3-6	2-0	3-0	0.96	39	6.0

NOMENCLATURE

D = DEPTH OF WATER IN DITCH.
H = HEIGHT OF FALL IN WATER SURFACE.

NOTES

1. STRUCTURE SHALL BE INSTALLED IN ACCORDANCE WITH NRCS ENGINEERING STANDARD & SPECIFICATIONS NO. COLO.-587 "STRUCTURE FOR WATER CONTROL".
2. ALL SPACES EXCAVATED AND NOT OCCUPIED BY THE STRUCTURE SHALL BE BACKFILLED WITH EARTH UP TO THE GROUND SURFACE. THE BACKFILL SHALL BE COMPACTED TO A DENSITY EQUAL TO THE DENSITY OF THE ADJACENT EARTH. THE MOISTURE CONTENT OF THE BACKFILL MATERIAL SHALL BE SUCH THAT THE REQUIRED COMPACTION WILL BE OBTAINED.
3. THIS DRAWING REPLACES DRAWINGS NO. 5.0-19.000.1-1 THROUGH 5.0-19.000.1-4.
4. STANDARDIZES DESIGNS - MUST BE ADOPTED TO THE SPECIFIC SITE.

NRCS
Natural Resources Conservation Service
United States Department of Agriculture

TRAPEZOIDAL CHUTE DROP

(REVISED LAST ON 07-11)

		Date
Designed	REJ	4-69
Drawn	DDD	7-11
Checked	RRM	4-69
Approved	J.E. ANDREWS S.C.E.	7-11

File Name

Drawing Name CO-SSP-14

Sheet 1 of 1