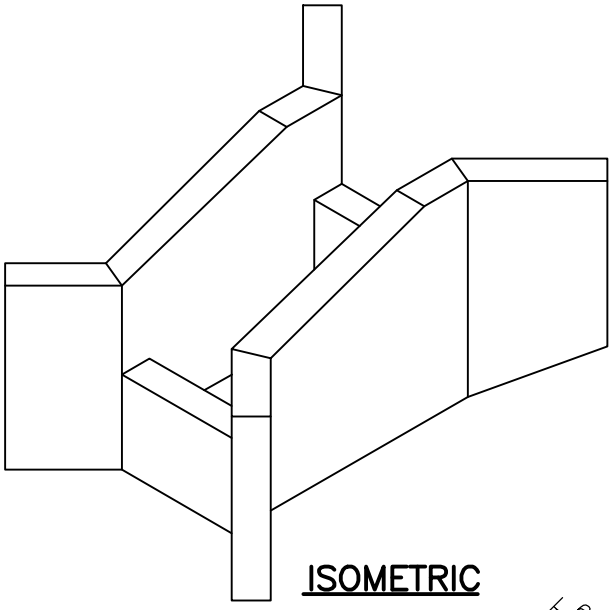

ISOMETRIC

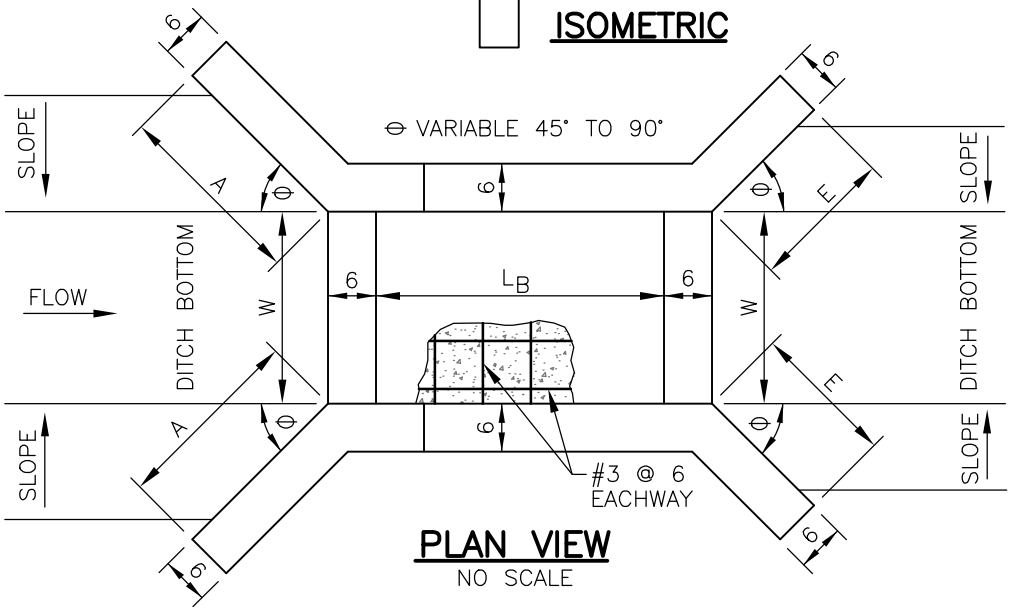

PLAN VIEW

NO SCALE

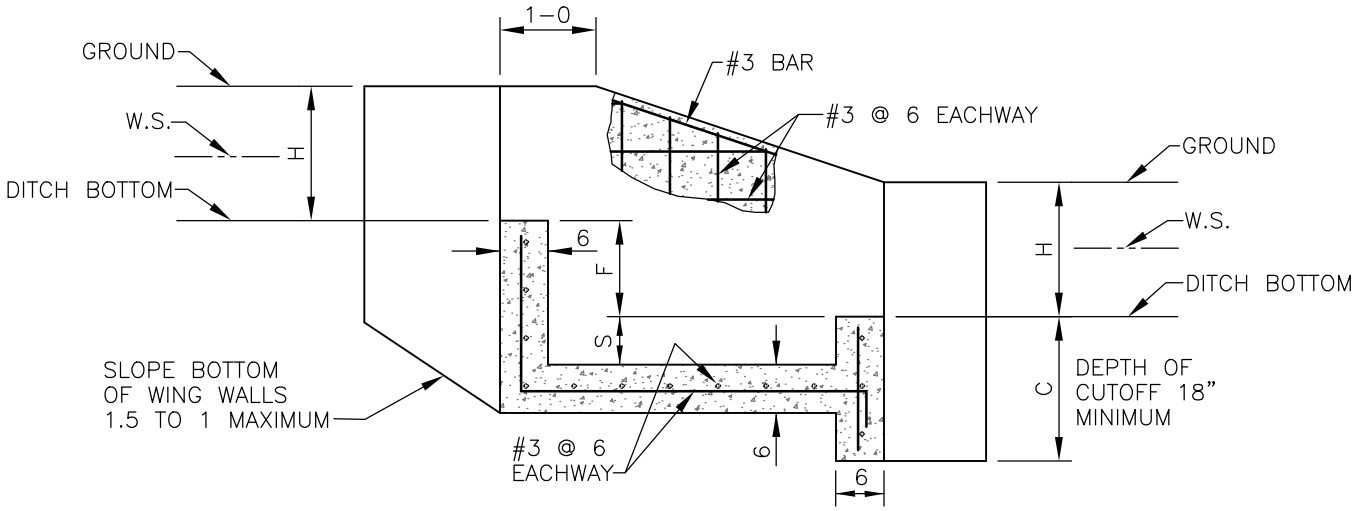

LONGITUDINAL SECTION

NO SCALE

NRCS Natural Resources Conservation Service United States Department of Agriculture	TYPICAL SMALL DROP	Designed CWM, RIB — Date 4-69	File Name
		Drawn DDD — 4-10	Drawing Name CO-SSP-16
	(REVISED LAST ON 04-10)	Checked	
		Approved J.E. ANDREWS S.C.E. — 4-10	Sheet 1 of 2

TABLE OF DIMENSIONS AND QUANTITIES

F	FLOW DEPTH D	NOTCH DEPTH H	HEAD WINGWALL LENGTH A	CUSHION LENGTH L_B	CUSHION DEPTH S	OUTLET WINGWALL HEIGHT J	OUTLET WINGWALL LENGTH E	CUT-OFF DEPTH C	NOTCH WIDTH W	CAPACITY C.F.S.	CONCRETE (CU. FT.)	CONCRETE (CU. YDS.)
1-0	0.5	0.8	1.5	2.0	0.5	1.0	1.0	1.5	1.0	1.11	16.9	0.63
									1.5	1.68	18.3	0.68
									2.0	2.24	19.7	0.73
									2.5	2.84	21.0	0.78
	0.75	1.1	1.5	3.0	0.5	1.5	1.12	1.5	1.0	2.01	22.7	0.84
									1.5	3.05	24.3	0.90
									2.0	4.10	26.0	0.96
									3.0	6.27	29.2	1.08
	1.00	1.4	2.0	3.0	0.5	1.8	1.5	1.5	1.0	3.06	27.6	1.02
									1.5	4.64	29.3	1.09
									2.0	6.25	30.9	1.14
									3.0	9.48	34.2	1.27
1-6	0.5	0.8	1.5	2.0	0.5	1.0	1.0	1.5	1.0	1.11	18.6	0.69
									1.5	1.68	20.2	0.75
									2.0	2.24	21.6	0.80
									2.5	2.84	23.2	0.86
	0.75	1.1	1.5	3.0	0.5	1.5	1.12	1.5	1.0	2.01	24.7	0.91
									1.5	3.05	26.5	0.98
									2.0	4.10	28.2	1.04
									3.0	6.27	31.7	1.17
	1.00	1.4	2.0	3.5	0.5	1.8	1.5	1.5	1.0	3.06	31.8	1.18
									1.5	4.64	33.7	1.25
									2.0	6.25	35.6	1.32
									3.0	9.48	39.3	1.46
	1.25	1.6	2.5	4.0	0.5	2.0	1.88	1.88	2.0	8.14	44.1	1.63
									3.0	12.78	48.3	1.79
2-0	0.5	0.8	1.5	3.0	0.5	1.0	1.0	1.5	1.0	1.11	23.8	0.88
									1.5	1.68	25.6	0.95
	0.75	1.1	1.5	3.5	0.5	1.5	1.12	1.5	1.0	2.01	28.6	1.06
									1.5	3.05	30.6	1.13
									2.0	4.10	32.6	1.21
									2.5	5.09	34.6	1.28
	1.00	1.4	2.0	4.5	0.5	1.8	1.5	1.5	1.0	3.06	38.3	1.42
									1.5	4.64	40.6	1.50
									2.0	6.25	42.8	1.59
									2.5	7.66	45.1	1.67
									3.0	9.48	47.3	1.75
	1.25	1.6	2.5	4.5	0.5	2.0	1.88	1.88	2.0	8.14	49.5	1.83
									3.0	12.78	54.2	2.01
	1.50	1.9	3.0	5.0	0.8	2.5	2.25	2.25	3.0	16.52	69.6	2.58
3-0	0.5	0.8	1.5	3.5	0.5	1.0	1.0	1.5	1.0	1.11	29.8	1.10
									1.5	1.68	32.0	1.19
									2.0	2.24	34.3	1.27
	0.75	1.1	1.5	4.0	0.5	1.5	1.12	1.5	1.0	2.01	35.0	1.30
									1.5	3.05	37.4	1.39
									2.0	4.10	39.8	1.47
									2.5	5.09	42.1	1.56
									3.0	6.27	44.5	1.65
	1.00	1.4	2.0	5.0	0.5	1.8	1.5	1.5	1.0	3.06	45.8	1.70
									1.5	4.64	48.5	1.80
									2.0	6.25	51.1	1.89
									2.5	7.66	63.7	1.99
									3.0	9.48	56.4	2.09
	1.25	1.6	2.5	5.0	0.5	2.0	1.88	1.88	2.0	8.14	58.4	2.16
									3.0	12.78	63.9	2.37
	1.50	1.9	3.0	5.5	0.8	2.5	2.25	2.25	2.0	10.42	74.3	2.75
									3.0	16.52	80.4	2.98
	2.00	2.4	4.0	6.5	0.8	3.0	3.0	3.0	3.0	27.50	107.6	3.99

1. STRUCTURE SHALL BE INSTALLED IN ACCORDANCE WITH SOIL CONSERVATION SERVICE ENGINEERING STANDARD AND SPECIFICATIONS NO. COLO.-587 "STRUCTURE FOR WATER CONTROL".
2. ALL SPACES EXCAVATED AND NOT OCCUPIED BY THE STRUCTURE SHALL BE BACKFILLED WITH EARTH UP TO THE GROUND SURFACE. THE BACKFILL SHALL BE COMPACTED TO A DENSITY EQUAL TO THE DENSITY OF THE ADJACENT EARTH. THE MOISTURE CONTENT OF THE BACKFILL MATERIAL SHALL BE SUCH THAT THE REQUIRED COMPACTION WILL BE OBTAINED.
3. BASED ON DESIGN 6-N-12112-9.
4. THIS DRAWING REPLACES DRAWINGS NO. M-347 AND STM-179.
5. STANDARDIZED DESIGNS - MUST BE ADOPTED TO THE SPECIFIC SITE.
6. THE STRUCTURE SHALL CONFORM TO ENGINEERING STANDARD AND SPECIFICATIONS 587, STRUCTURE FOR WATER CONTROL.

NRCS
Natural Resources Conservation Service
United States Department of Agriculture

TYPICAL SMALL DROP

(REVISED LAST ON 04-10)

		Date
Designed	CWM, RIB	4-69
Drawn	DDD	4-10
Checked		
Approved	J.E. ANDREWS S.C.E.	4-10

File Name

Drawing Name CO-SSP-16

Sheet 2 of 2