QUANTITY AND DIMENSION TABLE

RISER DIA. R (INS.)	BARREL DIA. D (INS.)	HEIGHT H (FT.)	X (INS.)	Y (INS.)	REINFORCING STEEL (LBS.)	CONCRETE (CU. YDS.)
15	12	4	3	4½	33	0.51
24	15	4	2⅝	3	51	0.74
24	18	4	4⅛	3	51	0.74
30	21	4	4¼	3	63	0.92
30	24	4	6	3	63	0.92
42	30	6	6¼	3	92	1.32
48	36	6	8⅛	3	108	1.56
54	42	6	10	3	126	1.81
60	48	6	12	3	145	2.07

THIS DRAWING REPLACES DRAWINGS NO. 5,N–17,987 AND 5,0–19,000.40–2.

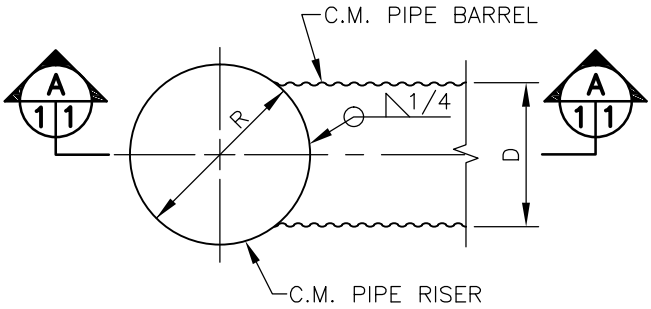

PLAN VIEW

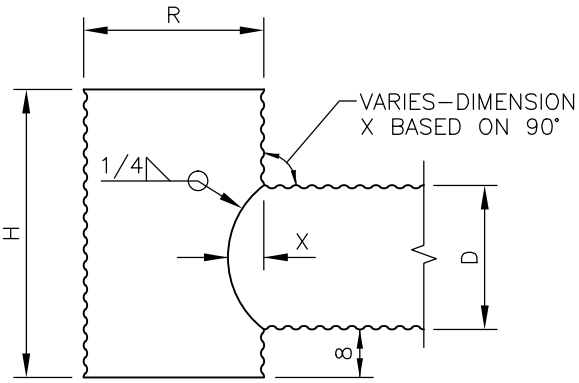

SECTIONAL ELEVATION A 1 1

(DETAILS OF BARREL WITH RISER TEE SECTION)

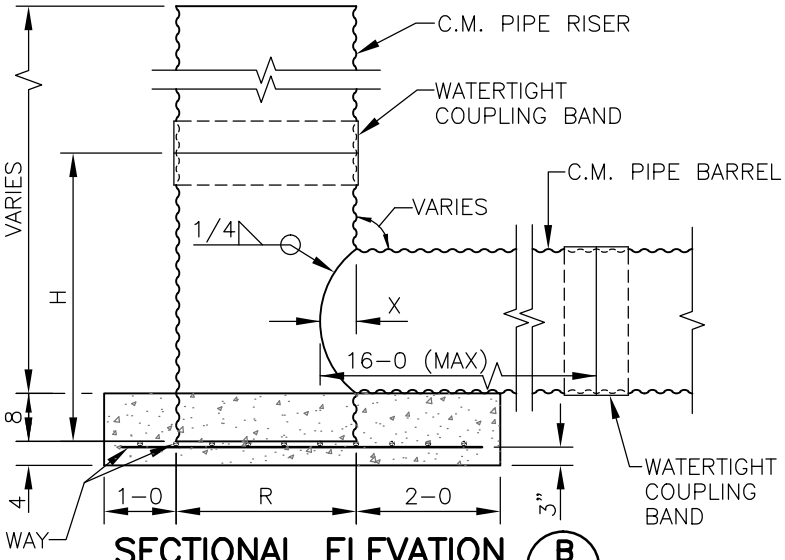

SECTIONAL ELEVATION B 1 1

(DETAILS OF RISER)

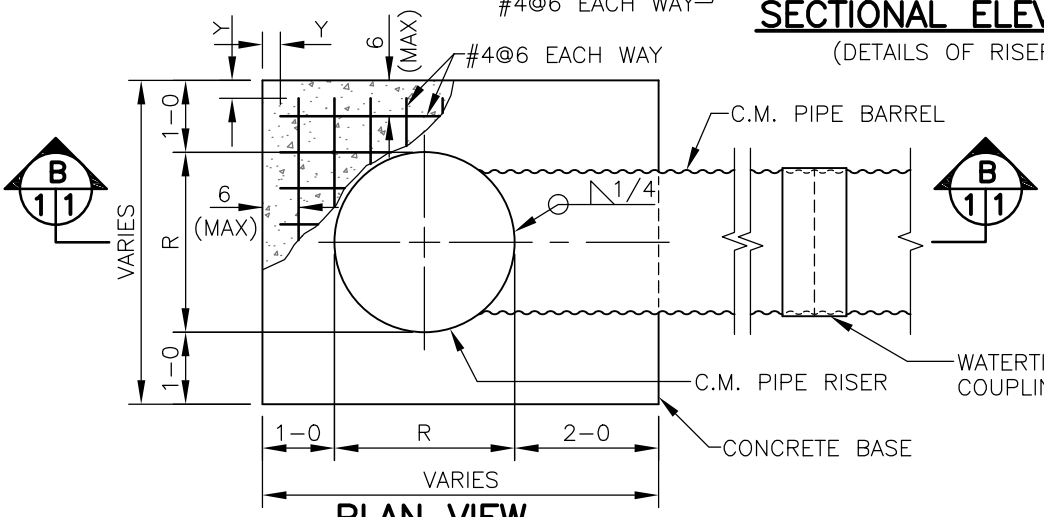

PLAN VIEW

NO SCALE ON DETAILS

NOTES:

1. STANDARDIZED DESIGNS – MUST BE ADAPTED TO THE SPECIFIC SITE.
2. CONCRETE SHALL CONFORM TO THE REQUIREMENTS OF CONSTRUCTION SPECIFICATION 31, CONCRETE, OR 32, CONCRETE FOR MINOR STRUCTURES.
3. REINFORCING STEEL SHALL CONFORM TO THE REQUIREMENTS OF CONSTRUCTION SPECIFICATION 34, STEEL REINFORCEMENT.
4. CORRUGATED METAL PIPE SHALL CONFORM TO THE REQUIREMENTS OF CONSTRUCTION SPECIFICATION 51, CORRUGATED METAL PIPE CONDUIT.
5. THE STRUCTURE SHALL CONFORM TO ENGINEERING STANDARD AND SPECIFICATIONS 378, POND WHEN APPROPRIATE.

NRCS
Natural Resources Conservation Service
United States Department of Agriculture

RISER DETAILS COLORADO

(REVISED LAST ON 04–10)

		Date
Designed	CRH	4–69
Drawn	DDD	4–10
Checked		
Approved	J.E. ANDREWS S.C.E.	4–10

File Name

Drawing Name CO–SSP–17

Sheet 1 of 1