NOTES

1. STANDARDIZED DESIGN – MUST BE ADAPTED TO THE SPECIFIC SITE.
2. CONSTRUCTION AND MATERIALS SHALL MEET S.C.S. ENGINEERING STANDARD AND SPECIFICATIONS NO. COLO.–378 "POND".
3. SEE CO–SSP–19 "RISER DETAIL COLORADO" FOR DETAILS OF RISER.
4. SEE CO–SSP–26 "INLET AND TRASH RACK DETAIL" FOR DETAILS OF INLET AND TRASH RACK.
5. SEE CO–SSP–41 "DETAILS OF CORRUGATED METAL DIAPHRAGM" FOR DETAILS OF ANTI–SEEP COLLARS.
6. SEE CO–SSP–39 "STANDARD TYPE 'B' WATERTIGHT CONNECTING BAND" FOR DETAILS OF BANDS.

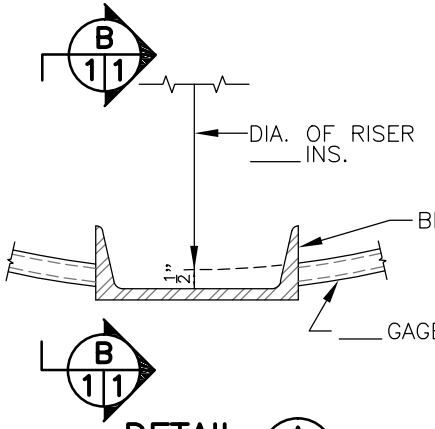

DETAIL A 1 1
NO SCALE

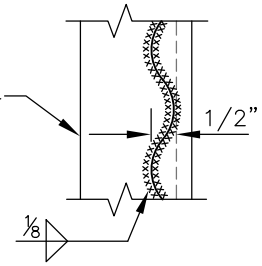

SECTION B 1 1
NO SCALE

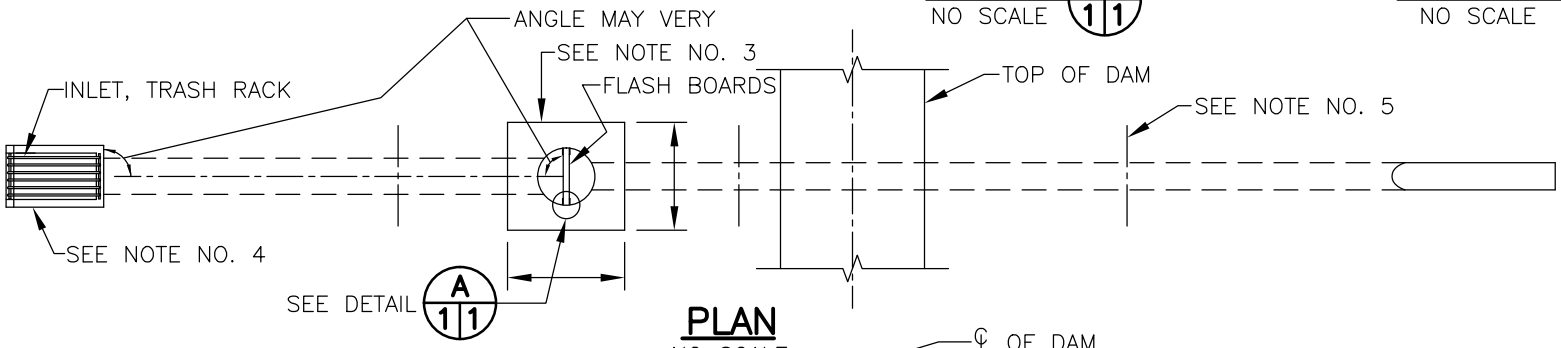

PLAN
NO SCALE

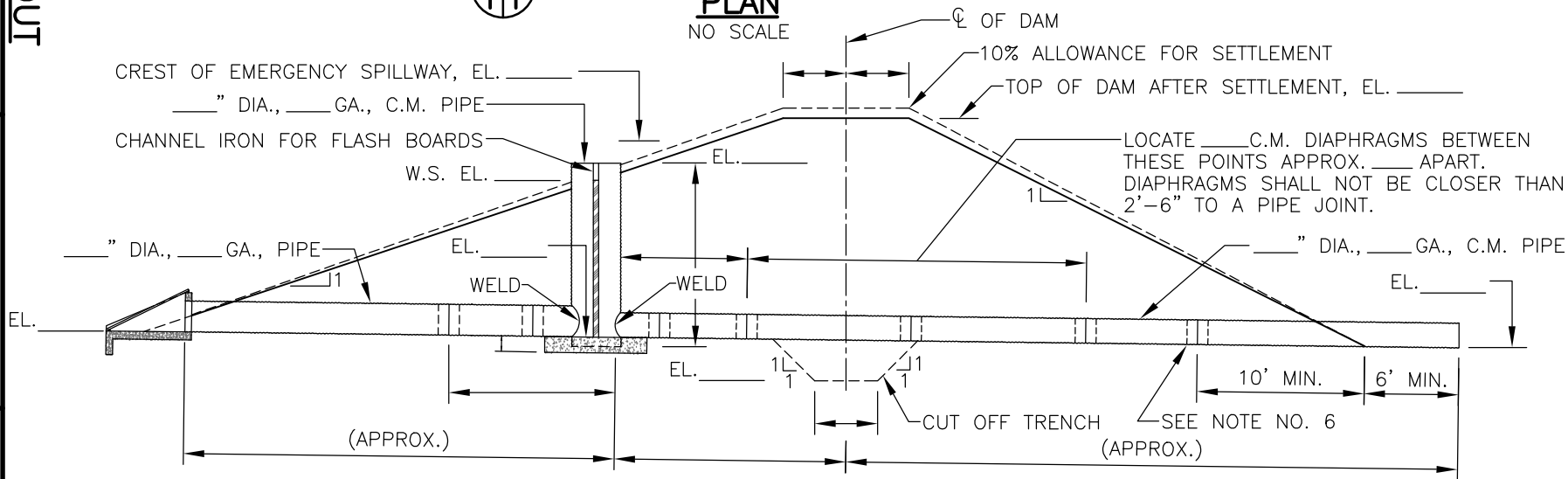

SECTIONAL ELEVATION OF DAM ALONG ℄ OF OUTLET CONDUIT
NO SCALE

REFERENCE LAYOUT

FISH POND DAM WITH FLASH BOARD TRICKLE SPILLWAY AND APPURTENANCES
(REVISED 6–10)

NRCS
Natural Resources Conservation Service
United States Department of Agriculture

		Date
Designed	FK & RDM	5–69
Drawn	DDD	6–10
Checked		
Approved	J.E. ANDREWS S.C.E.	6–10

File Name

Drawing Name CO–SSP–25

Sheet 1 of 1