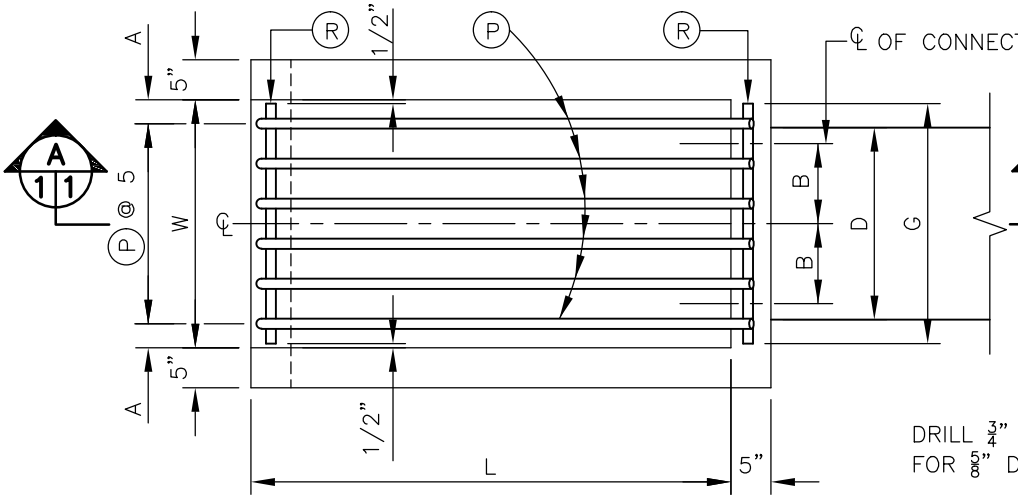

PLAN
NO SCALE

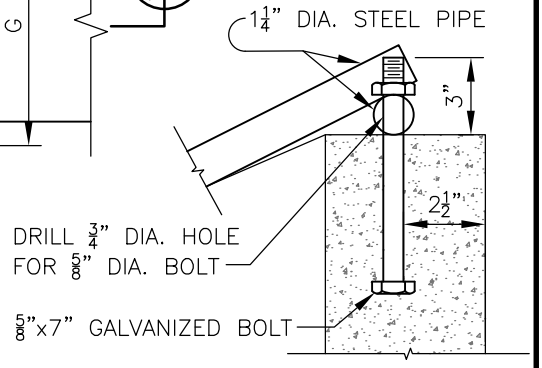

DETAIL A 1 1
NO SCALE

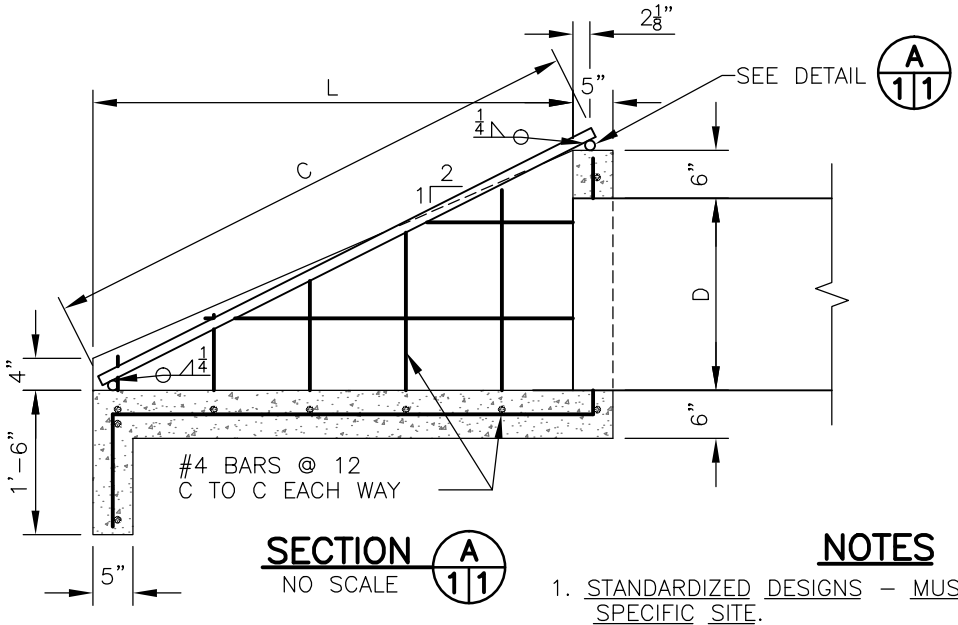

SECTION A 1 1
NO SCALE

NOTES

1. STANDARDIZED DESIGNS – MUST BE ADAPTED TO THE SPECIFIC SITE.
2. THE STRUCTURE SHALL CONFORM TO ENGINEERING STANDARD AND SPECIFICATIONS 37B, POND.

TABLE OF DIMENSIONS AND QUANTITIES FOR INLET

D PIPE DIA. (IN)	B (IN)	L (FT–IN)	W (FT–IN)	CONCRETE (CU. YDS.)	REINFORCING STEEL (APPROX. LBS.)	CONNECTING BOLTS NEEDED (EACH)
6	0	2–0	1–0	0.18	16	1
8	2½	2–4	1–2	0.22	20	1
10	2½	2–8	1–4	0.27	24	1
12	2½	3–0	1–6	0.32	28	1
14	5	3–4	1–8	0.38	33	2
15	5	3–6	1–9	0.41	36	2
16	5	3–8	1–10	0.44	39	2
18	7½	4–0	2–1	0.52	45	2
20	7½	4–4	2–3	0.59	52	2
21	7½	4–6	2–4	0.63	55	2
24	10	5–0	2–7	0.75	65	2

TRASH RACK DIMENSIONS

D PIPE DIA. (IN)	A (IN)	C (FT–IN)	G (FT–IN)	NO. OF MARK (P) REQ'D.	NO. OF MARK (R) REQ'D.	TOTAL LENGTH OF PIPE REQ'D.
6	3½	2–5	0–11	2	2	6–8
8	2	2–9	1–1	3	2	10–5
10	3	3–2	1–3	3	2	12–0
12	4	3–6	1–5	3	2	13–4
14	2½	3–11	1–7	4	2	18–10
15	3	4–1	1–8	4	2	19–8
16	3½	4–3	1–9	4	2	20–6
18	2½	4–8	2–0	5	2	27–4
20	3½	5–0	2–2	5	2	29–4
21	4	5–2	2–3	5	2	30–4
24	3	5–9	2–6	6	2	39–6

NRCS
Natural Resources Conservation Service
United States Department of Agriculture

INLET AND TRASH RACK DETAIL

(REVISED LAST ON 10–09)

		Date
Designed	RDM	7–69
Drawn	DDD	8–08
Checked		
Approved	J.E. ANDREWS S.C.E.	10–09

File Name

Drawing Name CO–SSP–26

Sheet 1 of 1