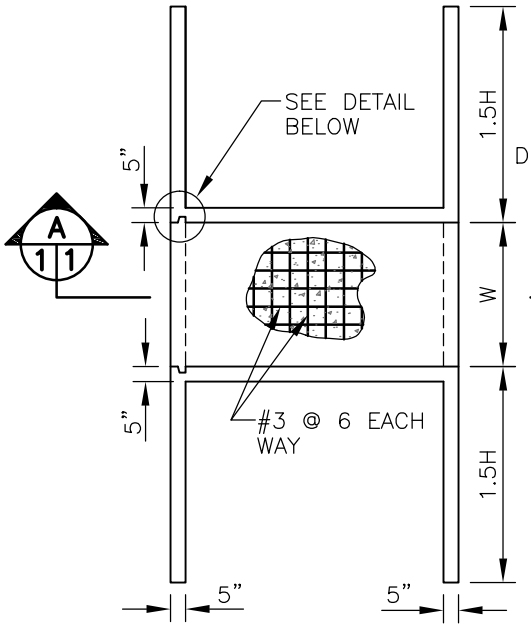

PLAN VIEW
NO SCALE

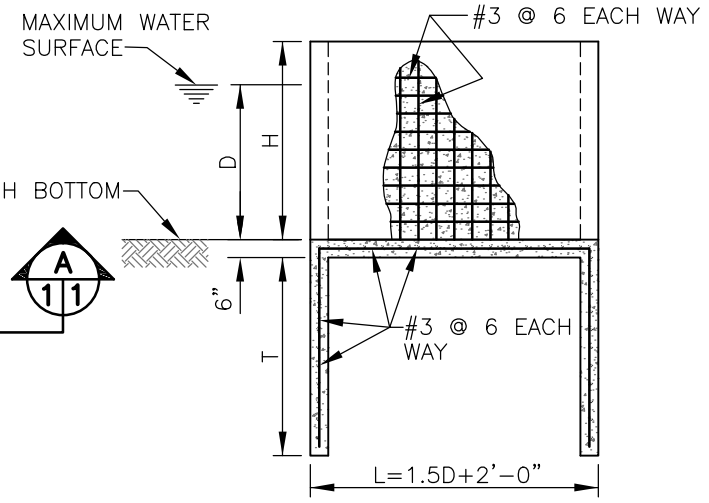

SECTIONAL ELEVATION A 1 1
NO SCALE

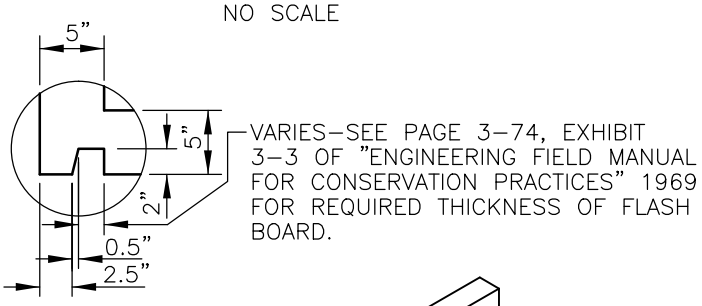

GATE SLOT DETAIL
NO SCALE

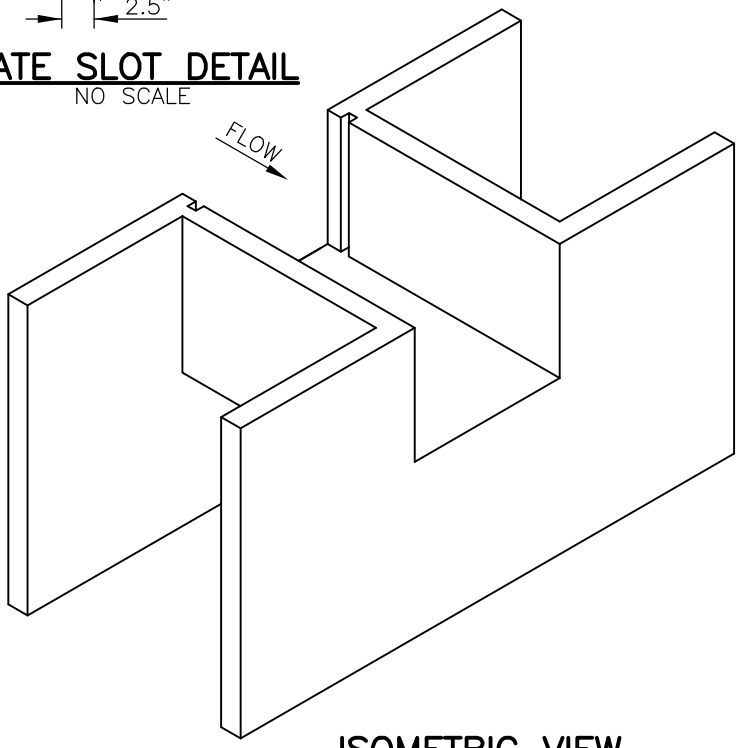

ISOMETRIC VIEW
NO SCALE

NOTES

1. STRUCTURES SHALL BE INSTALLED IN ACCORDANCE WITH S.C.S ENGINEERING STANDARD AND SPECIFICATIONS NO. COLO.–587, "STRUCTURE FOR WATER CONTROL."

2. ALL SPACES EXCAVATED AND NOT OCCUPIED BY THE STRUCTURE SHALL BE BACKFILLED WITH EARTH UP TO THE GROUND SURFACE. THE BACKFILL SHALL BE COMPACTED TO A DENSITY OF THE ADJACENT EARTH. THE MOISTURE CONTENT OF THE BACKFILL MATERIAL SHALL BE SUCH THAT THE REQUIRED COMPACTION WILL BE OBTAINED.

3. EXPOSED CONCRETE EDGES SHALL BE CHAMFERED 1 INCH OR ROUNDED.

4. REINFORCING BAR SPACING IS CENTER TO CENTER OF BARS. BAR COVER IS CLEAR DISTANCE BETWEEN SURFACE OF BAR AND FACE OF CONCRETE AND SHALL BE 2" FOR FORMED & TOP SURFACES AND 3" FOR SURFACES PLACED AGAINST EARTH UNLESS OTHERWISE SHOWN.

5. IN SECTIONS WITH A SINGLE MAT OF REINFORCING STEEL, THE STEEL SHALL BE POSITIONED IN THE CENTER OF THE SECTION, UNLESS OTHERWISE SHOWN.

6. REINFORCING BARS SHALL BE CONTINUOUS OR SPLICED FROM FLOOR AND WALLS INTO ADJACENT FLOOR AND WALLS.

7. BAR SPLICES SHALL BE LAPPED AT LEAST 30 BAR DIAMETERS BUT NOT LESS THAN 12 INCHES.

8. SEE SHEET 2 OF 2 FOR "TABLE OF DIMENSIONS AND QUANTITIES."

NRCS
Natural Resources Conservation Service
United States Department of Agriculture

SMALL CONCRETE CHECK OR TURNOUT

(REVISED LAST ON 10–09)

		Date	File Name
Designed	CRH	8–70	
Drawn	GJM	7–09	Drawing Name CO–SSP–38
Checked			
Approved	J.E. ANDREWS S.C.E.	10–09	Sheet 1 of 2

TABLE OF DIMENSIONS & QUANTITIES

Soil Class	H (FT)	D (FT)	T (FT)	W=	CONCRETE (CUBIC YARDS)							
					1.5FT	2.0FT	2.5FT	3.0FT	3.5FT	4.0FT	5.0FT	6.0FT
SP–SM, ML	1.5	1.0	2.42		0.91	0.98	1.04	1.10	1.16	1.22	1.35	1.47
	2.0	1.5	3.33		1.53	1.61	1.69	1.78	1.86	1.94	2.11	2.27
	2.5	2.0	4.33		2.32	2.42	2.53	2.63	2.74	2.84	3.05	3.26
	3.0	2.25	4.83		3.05	3.17	3.29	3.40	3.52	3.64	3.87	4.10
	3.5	2.75	5.83		4.14	4.28	4.42	4.56	4.70	4.83	5.11	5.39
	4.0	3.0	6.25		5.08	5.23	5.38	5.53	5.68	5.83	6.12	6.42
SM	1.5	1.0	2.25		0.88	0.94	1.00	1.06	1.12	1.18	1.30	1.42
	2.0	1.5	3.00		1.45	1.53	1.60	1.68	1.76	1.84	2.00	2.15
	2.5	2.0	3.92		2.20	2.30	2.40	2.50	2.60	2.70	2.90	3.09
	3.0	2.25	4.33		2.89	3.00	3.11	3.22	3.33	3.44	3.65	3.87
	3.5	2.75	5.17		3.89	4.02	4.15	4.28	4.41	4.54	4.80	5.05
	4.0	3.0	5.67		4.84	4.98	5.12	5.26	5.40	5.54	5.82	6.10
SW, SP	1.5	1.0	1.92		0.82	0.88	0.93	0.98	1.04	1.09	1.20	1.31
	2.0	1.5	2.67		1.37	1.45	1.52	1.59	1.66	1.74	1.88	2.03
	2.5	2.0	3.33		2.04	2.13	2.22	2.31	2.40	2.49	2.67	2.85
	3.0	2.25	3.67		2.68	2.78	2.88	2.97	3.07	3.17	3.37	3.57
	3.5	2.75	4.33		3.58	3.70	3.82	3.93	4.05	4.16	4.39	4.63
	4.0	3.0	4.75		4.46	4.58	4.71	4.83	4.96	5.09	5.34	5.59
MH, SC, GC	1.5	1.0	1.75		0.79	0.84	0.89	0.95	1.00	1.05	1.15	1.26
	2.0	1.5	2.33		1.29	1.36	1.43	1.50	1.56	1.63	1.77	1.90
	2.5	2.0	2.92		1.92	2.01	2.09	2.17	2.26	2.34	2.51	2.68
	3.0	2.25	3.25		2.54	2.63	2.73	2.82	2.91	3.00	3.19	3.37
	3.5	2.75	3.83		3.40	3.51	3.61	3.72	3.83	3.94	4.16	4.37
	4.0	3.0	4.17		4.22	4.33	4.43	4.57	4.68	4.80	5.03	5.27
GW, GP	1.5	1.0	1.67		0.78	0.83	0.88	0.93	0.98	1.03	1.13	1.23
	2.0	1.5	2.17		1.26	1.32	1.39	1.45	1.52	1.58	1.71	1.84
	2.5	2.0	2.75		1.88	1.96	2.04	2.12	2.20	2.28	2.44	2.61
	3.0	2.25	3.00		2.46	2.55	2.64	2.73	2.81	2.90	3.08	3.26
	3.5	2.75	3.58		3.31	3.41	3.51	3.62	3.72	3.83	4.04	4.24
	4.0	3.0	3.83		4.07	4.19	4.30	4.41	4.52	4.63	4.85	5.08
CL	1.5	1.0	1.33		0.71	0.76	0.80	0.85	0.89	0.94	1.03	1.12
	2.0	1.5	1.75		1.16	1.22	1.28	1.34	1.39	1.45	1.57	1.69
	2.5	2.0	2.17		1.72	1.79	1.86	1.93	2.00	2.08	2.22	2.36
	3.0	2.25	2.33		2.24	2.32	2.40	2.48	2.56	2.63	2.79	2.95
	3.5	2.75	2.75		3.00	3.09	3.18	3.27	3.36	3.46	3.64	3.82
	4.0	3.0	2.92		3.69	3.79	3.89	3.99	4.08	4.18	4.38	4.57
HARD PAN, SHALE, CH	1.5	1.0	1.25		0.70	0.74	0.79	0.83	0.87	0.92	1.01	1.09
	2.0	1.5	1.58		1.12	1.18	1.23	1.29	1.34	1.40	1.51	1.62
	2.5	2.0	1.92		1.65	1.71	1.78	1.85	1.92	1.99	2.12	2.26
	3.0	2.25	2.17		2.19	2.27	2.34	2.42	2.49	2.57	2.72	2.87
	3.5	2.75	2.42		2.88	2.96	3.05	3.14	3.22	3.31	3.48	3.65
	4.0	3.0	2.67		3.59	3.68	3.78	3.87	3.96	4.06	4.25	4.43

NOTE:
THE REINFORCING STEEL IS EQUAL TO APPROXIMATELY 100 LBS PER CUBIC YARD OF CONCRETE.

NRCS
Natural Resources Conservation Service
United States Department of Agriculture

SMALL CONCRETE CHECK OR TURNOUT

(REVISED LAST ON 10–09)

		Date
Designed	CRH	8–70
Drawn	GJM	7–09
Checked		
Approved	J.E. ANDREWS S.C.E.	10–09

File Name

Drawing Name CO–SSP–38

Sheet 2 of 2