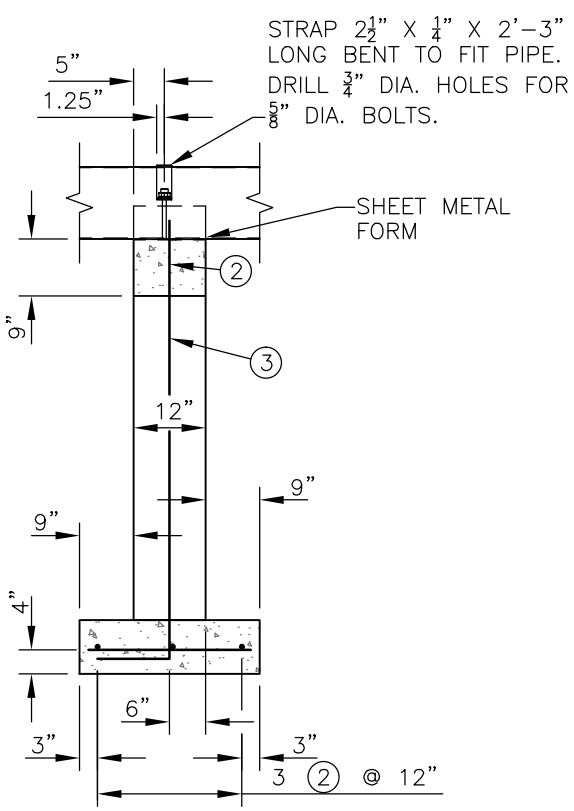

SECTION A 1 1

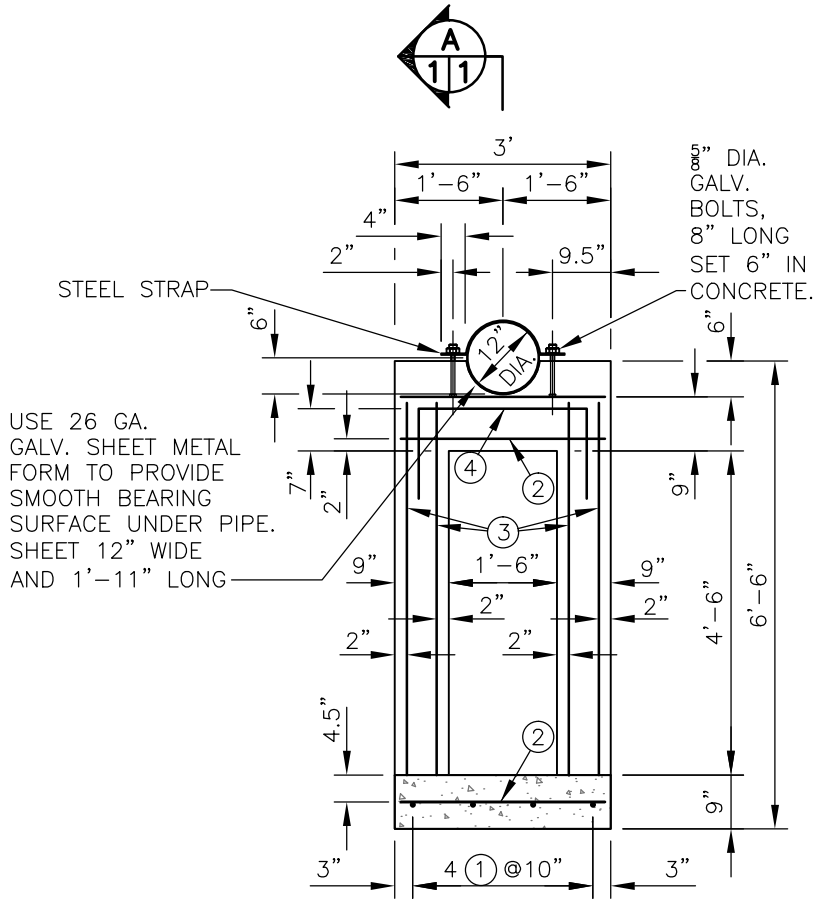

DETAIL OF PIPE SUPPORT

NO SCALE

ELEVATION

BAR SCHEDULE

MARK	SIZE	QUANTITY	LENGTH	TYPE	A	B	G	TOTAL LENGTH
1	4	4	2–3	STR.				9–0
2	4	4	2–9	STR.				11–0
3	4	4	7–0	2	1–0	6–0		29–0
4	4	1	5–2	2	1–3	2–8	1–3	5–2

QUANTITIES

ITEM	UNIT	QUANTITIES
CONCRETE	CU. YD.	0.58
REINFORCING	LBS.	36
STRUCTURAL EXCAVATION	CU. YD.	5

BAR TYPES

NOTES:

1. STANDARD DESIGNS – MUST BE ADAPTED TO THE SPECIFIC SITE.
2. CONCRETE SHALL CONFORM TO THE REQUIREMENTS OF CONSTRUCTION SPECIFICATIONS 31, CONCRETE OR 32, CONCRETE FOR MINOR STRUCTURES.
3. REINFORCING STEEL SHALL CONFORM TO THE REQUIREMENTS OF CONSTRUCTION SPECIFICATION 34, STEEL REINFORCEMENT.
4. THE STRUCTURE SHALL CONFORM TO ENGINEERING STANDARD AND SPECIFICATIONS 378, POND, WHEN APPROPRIATE.
5. METAL SHALL CONFORM TO THE REQUIREMENTS OF CONSTRUCTION SPECIFICATION 81, METAL FABRICATION AND INSTALLATION.

NRCS
Natural Resources Conservation Service
United States Department of Agriculture

CONCRETE PIPE SUPPORT FOR 12" DIA. CM PIPE COLORADO

(REVISED LAST ON 08–10)

		Date
Designed	CRH	3–60
Drawn	PEB	8–10
Checked		
Approved	J.E. ANDREWS S.C.E.	8–10

File Name

Drawing Name CO–SSP–5

Sheet 1 of 1