NOTES:

1. STANDARDIZED DESIGNS—MUST BE ADAPTED TO THE SPECIFIC SITE.
2. STEEL SHALL CONFORM TO THE REQUIREMENTS OF CONSTRUCTION SPECIFICATION 81, METAL FABRICATION AND INSTALLATION.

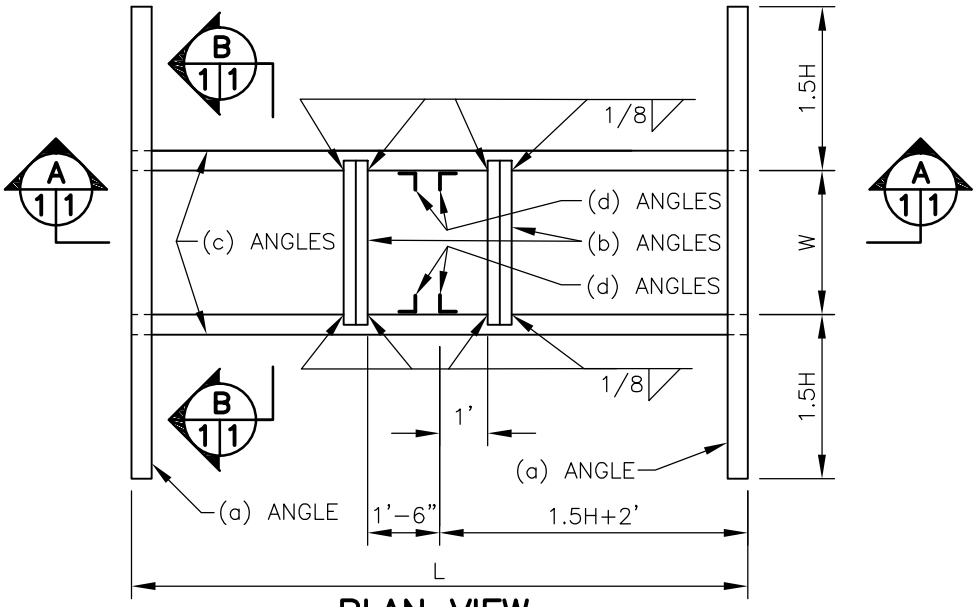

PLAN VIEW
NO SCALE

NOTES:

(a) ANGLES—2 EACH
(b) ANGLES—2 EACH
(c) ANGLES—2 EACH
(d) ANGLES—4 EACH

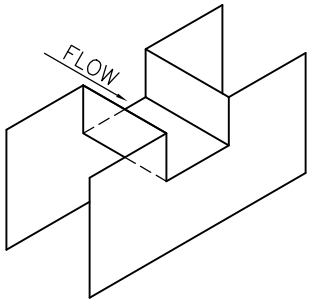

ISOMETRIC VIEW
NO SCALE

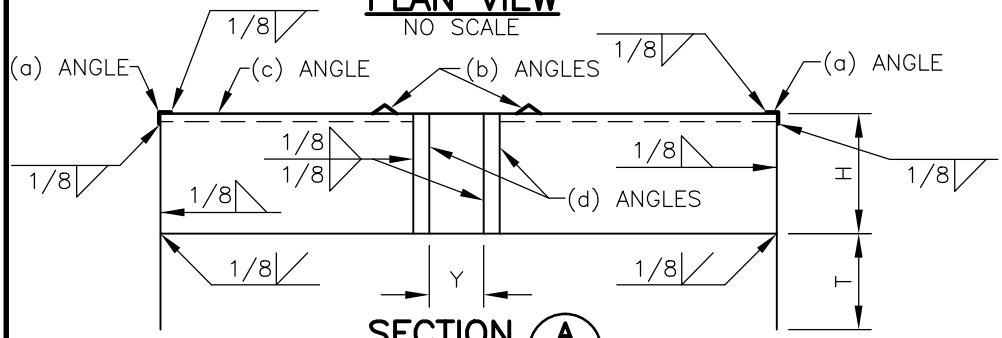

SECTION A 1 1
NO SCALE

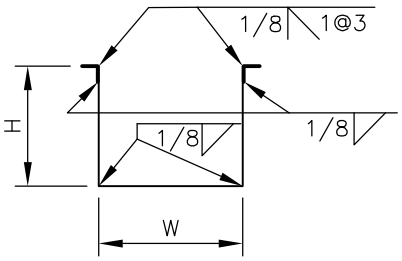

SECTION B 1 1
NO SCALE

ANGLE SIZES

W (FT.)	(a) ANGLE SIZE	(b) ANGLE SIZE & LENGTH
1.5	1 X 1 X ⅛	1 X 1 X ⅛~1'-9"
2.0	1 X 1 X ⅛	1 X 1 X ⅛~2'-3"
2.5	1 X 1 X ⅛	1 X 1 X ⅛~2'-9"
3.0	1 X 1 X ⅛	1 X 1 X ⅛~3'-3"
3.5	1¼ X 1¼ X ⅛	1¼ X 1¼ X ⅛~3'-9"
4.0	1¼ X 1¼ X ⅛	1¼ X 1¼ X ⅛~4'-3"
5.0	1¾ X 1¾ X ⅛	1¾ X 1¾ X ⅛~5'-3"
6.0	2 X 2 X ⅛	2 X 2 X ⅛~6'-3"

LENGTH OF (a) ANGLES—FEET

H (FT.)	W (FT.)							
	1.5	2.0	2.5	3.0	3.5	4.0	5.0	6.0
1.5	6.0	6.5	7.0	7.5	8.0	8.5	9.5	10.5
2.0	7.5	8.0	8.5	9.0	9.5	10.0	11.0	12.0
2.5	9.0	9.5	10.0	10.5	11.0	11.5	12.5	13.5
3.0	10.5	11.0	11.5	12.0	12.5	13.0	14.0	15.0
3.5	12.0	12.5	13.0	13.5	14.0	14.5	15.5	16.5
4.0	13.5	14.0	14.5	15.0	15.5	16.0	17.0	18.0

WIDTH OF FLASHBOARD NOTCH (Y)—INS.

H (FT.)	W (FT.)							
	1.5	2.0	2.5	3.0	3.5	4.0	5.0	6.0
1.5	1	1	2	2	2	2	3	3
2.0	1	2	2	2	2	3	3	3
2.5	1	2	2	2	3	3	3	4
3.0	2	2	2	3	3	3	3	4
3.5	2	2	2	3	3	3	3	4
4.0	2	2	2	3	3	3	3	4

(c) ANGLE SIZES

H (FT.)	(c) ANGLE SIZE
1.5	1 X 1 X ⅛ X L long
2.0	1¼ X 1¼ X ⅛ X L long
2.5	1¾ X 1¾ X ⅛ X L long
3.0	2 X 2 X 3/16 X L long
3.5	2½ X 2½ X ¼ X L long
4.0	3 X 3 X ½ X L long

ALL (d) ANGLES— 1½ X 1½ X ⅛ X H long

NRCS
Natural Resources Conservation Service
United States Department of Agriculture

SMALL STEEL CHECK OR TURNOUT

(REVISED LAST ON 10-09)

		Date
Designed	JH & GWN	6-78
Drawn	GJM	7-09
Checked		
Approved	J.E. ANDREWS S.C.E.	10-09

File Name

Drawing Name CO-SSP-52

Sheet 1 of 2

TABLE I

SOIL CLASS	H (FT)	T (FT)	LENGTH (FEET) W=1.5	W=2.0	W=2.5	W=3.0	W=3.5	W=4.0	W=5.0	W=6.0	STEEL (POUNDS) W=1.5	W=2.0	W=2.5	W=3.0	W=3.5	W=4.0	W=5.0	W=6.0
SP-SM ML	1.5	2.67	6.25	6.25	6.25	9.00	9.25	9.50	9.00	6.25	352	379	406	510	555	597	831	1016
	2.0	3.67	7.00	7.00	7.00	7.00	7.00	7.00	7.00	7.00	883	586	619	682	873	916	1329	1450
	2.5	4.67	7.75	7.75	7.75	7.75	7.75	7.75	7.75	7.75	1019	1069	1118	1168	1224	1676	1824	2588
	3.0	5.67	8.50	8.50	8.50	8.50	8.50	8.50	8.50	8.50	1852	1928	2004	2080	2163	2239	3174	3387
	3.5	6.67	9.25	9.25	9.25	9.25	9.25	9.25	9.25	9.25	3218	3333	3447	3562	3684	3799	4046	5446
	4.0	7.67	10.00	10.00	10.00	10.00	10.00	10.00	10.00	10.00	4123	4251	4380	4508	4644	4773	5050	6753
SM	1.5	2.33	6.25	6.25	8.50	9.00	9.50	9.75	9.25	8.25	334	360	443	487	539	590	806	1101
	2.0	3.17	7.00	7.00	7.00	10.75	7.00	7.00	7.00	7.00	520	551	582	735	820	859	1248	1360
	2.5	4.08	7.75	7.75	7.75	7.75	7.75	7.75	7.75	7.75	959	1006	1052	1098	1151	1575	1713	2429
	3.0	4.92	8.50	8.50	8.50	8.50	8.50	8.50	8.50	8.50	1734	1804	1875	1945	2022	2093	2964	3162
	3.5	5.83	9.25	9.25	9.25	9.25	9.25	9.25	9.25	9.25	3016	3123	3229	3335	3449	3555	3786	5092
	4.0	6.67	10.00	10.00	10.00	10.00	10.00	10.00	10.00	10.00	3853	3971	4090	4208	4334	4453	4710	6292
SW SP	1.5	1.92	6.25	6.25	8.75	9.25	9.75	9.75	9.50	8.50	313	336	424	487	517	549	774	1054
	2.0	2.67	7.00	7.00	7.00	11.00	7.00	10.75	7.00	10.50	487	516	545	704	766	979	1164	1539
	2.5	3.42	7.75	7.75	7.75	7.75	7.75	7.75	7.75	7.75	892	935	978	1020	1069	1461	1588	2251
	3.0	4.17	8.50	8.50	8.50	8.50	8.50	8.50	8.50	8.50	1616	1680	1745	1810	1882	1947	2754	2937
	3.5	4.92	9.25	9.25	9.25	9.25	9.25	9.25	9.25	9.25	2798	2895	2992	3089	3194	3291	3504	4707
	4.0	5.67	10.00	10.00	10.00	10.00	10.00	10.00	10.25	10.00	3583	3691	3800	3908	4024	4133	4405	5831
MH SC GC	1.5	1.58	6.25	8.25	9.00	9.50	9.75	10.00	9.50	8.75	295	364	410	452	494	532	737	1017
	2.0	2.17	7.00	7.00	10.75	11.25	10.50	11.00	7.00	10.75	455	481	622	673	868	935	1081	1469
	2.5	2.83	7.75	7.75	7.75	7.75	8.00	7.75	8.00	7.75	883	872	911	951	1009	1389	1498	2091
	3.0	3.42	8.50	8.50	8.50	8.50	8.50	8.75	8.50	8.75	1498	1557	1616	1675	1741	1820	2544	2744
	3.5	4.08	9.25	9.25	9.25	9.25	9.25	9.25	9.50	9.25	2596	2685	2774	2662	2959	3048	3275	4352
	4.0	4.67	10.00	10.00	10.00	10.00	10.00	10.00	10.50	10.25	3313	3411	3310	3608	3714	3813	4099	5418
GW GP	1.5	1.42	6.25	8.50	9.25	9.50	9.75	10.00	9.75	9.00	286	361	406	441	482	520	732	1008
	2.0	1.92	7.00	7.00	10.75	11.25	10.75	11.25	10.50	10.75	438	464	603	653	852	919	1283	1424
	2.5	2.50	7.75	7.75	7.75	8.00	12.25	7.75	8.00	7.75	799	837	874	924	1183	1302	1436	2002
	3.0	3.08	8.50	8.50	8.50	8.50	8.50	8.75	8.50	8.75	1444	1501	1557	1614	1677	1754	2449	2642
	3.5	3.67	9.25	9.25	9.25	9.25	9.25	9.25	9.50	9.25	2498	2583	2667	2752	2844	2929	3148	4179
	4.0	4.17	10.00	10.00	10.00	10.00	10.00	10.00	10.50	10.25	3179	3211	3365	3458	3559	3683	3929	5187
CL	1.5	1.00	6.25	8.75	9.50	9.75	10.00	10.25	9.75	9.25	264	343	387	421	461	497	687	961
	2.0	1.42	7.00	7.00	11.00	11.50	11.00	11.50	10.75	11.25	405	429	573	622	810	874	1218	1372
	2.5	1.92	7.75	7.75	7.75	8.00	12.75	8.00	12.50	7.75	741	775	809	855	1137	1220	1678	1846
	3.0	2.33	8.50	8.50	8.50	8.50	8.75	9.00	8.75	9.00	1328	1377	1428	1479	1556	1628	2268	2448
	3.5	2.75	9.25	9.25	9.25	9.25	9.25	9.25	9.75	9.50	2277	2353	2428	2503	2586	2662	2894	3834
	4.0	3.17	10.00	10.00	10.00	10.00	10.00	10.25	10.75	10.50	2908	2991	3075	3158	3249	3365	3624	4774
HARD PAN SHALE CH	1.5	0.50	8.00	9.25	9.75	10.00	10.25	10.50	10.00	9.50	275	326	363	395	433	468	645	899
	2.0	0.58	7.00	10.75	11.50	12.00	11.50	11.75	11.25	11.50	350	476	526	572	742	791	1114	1240
	2.5	0.83	7.75	7.75	12.00	12.75	13.25	12.50	13.00	12.25	630	658	877	954	1027	1348	1513	2059
	3.0	1.00	8.50	8.50	8.50	9.00	13.25	14.00	9.00	14.00	1116	1157	1198	1276	1649	1768	1924	2673
	3.5	1.25	9.25	9.25	9.25	9.25	9.50	9.75	10.25	10.00	1917	1978	2038	2098	2194	2285	2492	3286
	4.0	1.50	10.00	10.00	10.00	10.25	10.50	10.75	11.25	11.00	2457	2324	2590	2687	2794	2896	3127	4098

12 GAGE STEEL PLATE

3 GAGE STEEL PLATE

10 GAGE STEEL PLATE

5/16" GAGE STEEL PLATE

7 GAGE STEEL PLATE

NRCS
Natural Resources Conservation Service
United States Department of Agriculture

SMALL STEEL CHECK OR TURNOUT

(REVISED LAST ON 11-09)

		Date
Designed	JH & GWN	10-78
Drawn	DDD	11-09
Checked		
Approved	J.E. ANDREWS S.C.E.	11-09

File Name

Drawing Name CO-SSP-52

Sheet 2 of 2