TABLE OF DIMENSIONS AND QUANTITIES

	FRONT																SIDES										BACK														BRACE DIMENSIONS (INCHES)			ANTI–VORTEX BAFFLE		NET AREA	APPROX. WEIGHT
	DIMENSIONS (INCHES)				RODS (INCHES)												DIMENSIONS (INCHES)						RODS (INCHES)				DIMENSIONS (INCHES)						RODS (INCHES)													
	a	b	c	x	Ⓐ NO.	Ⓐ LENGTH	Ⓑ NO.	Ⓑ LENGTH	Ⓒ NO.	Ⓒ LENGTH	Ⓓ NO.	Ⓓ LENGTH	Ⓔ NO.	Ⓔ LENGTH	Ⓕ NO.	Ⓕ LENGTH	e	f	g	h	p	q	Ⓖ NO.	Ⓖ LENGTH	Ⓗ NO.	Ⓗ LENGTH	b	c	d	k	l	w	Ⓑ NO.	Ⓑ LENGTH	Ⓒ NO.	Ⓒ LENGTH	Ⓙ NO.	Ⓙ LENGTH	Ⓚ NO.	Ⓚ LENGTH	Ⓛ NO.	Ⓛ LENGTH	y	z	NO. REQ'D.	D FT.–IN.	3½ D FT.–IN.	FT.²	LBS.
12" DIA. PIPE, USE ⅜" DIA. RODS 2"x 1½"x ⅛" ANGLES, 2"x 3/16" FLAT.	30	4	6	24	2	18½	2	12⅜	2	6⅜	1	40	1	32	1	24	26	33⅝	4¼	5¾	2¼	13½	7	26	3	33⅝	4	6	7 3/32	17	22	11 3/32	2	12⅜	2	6⅜	2	13	2	9	2	5	7	7¼	4	1–0	3–6	13.94	104
15" DIA. PIPE, USE ⅜" DIA. RODS 2"x 1½"x ⅛" ANGLES, 2"x 3/16" FLAT.	36	5	7½	30	2	23⅜	2	15⅞	2	8⅛	1	50	1	40	1	30	33	41½	5 3/16	7½	3	16¾	7	33	3	41½	5	7½	8 3/32	22	26	11 1/32	2	15⅞	2	8⅛	2	16	2	11	2	6½	7½	8¼	4	1–3	4–4½	22.64	135
18" DIA. PIPE, USE ⅜" DIA. RODS 2"x 1½"x 3/16" ANGLES, 2"x 3/16" FLAT.	44½	6	9⅜	36	2	29	2	19¾	2	10⅜	1	60⅝	1	48¼	1	36¼	40	50¼	6¼	9¼	3¼	20¼	7	40	3	50¼	6	9⅜	10 3/32	26	30	12⅝	2	19¾	2	10⅜	2	20⅜	2	14⅛	2	8	11	11⅜	4	1–6	5–3	35.55	192
21" DIA. PIPE, USE ½" DIA. RODS 2"x 1½"x 3/16" ANGLES, 2"x ¼" FLAT.	54	7	11	42	2	33¾	2	22¾	2	11¾	1	70½	1	56¾	1	42¾	47	58¾	7¼	11	4	24	7	47	3	58¾	7	11	12 3/32	30	36	14 5/80	2	22¾	2	11¾	2	23½	2	16½	2	9½	13	13⅜	4	1–9	6–1½	48.02	278
24" DIA. PIPE, USE ½" DIA. RODS 2"x 1½"x 3/16" ANGLES, 2"x ¼" FLAT.	60	8	12	48	2	39½	2	27½	2	15½	1	80⅜	1	64¼	1	48¼	54	67⅝	8 7/16	12¾	4⅜	27	7	54	3	67⅝	8	12	13 3/32	35	44	18 3/32	2	27½	2	15½	2	27	2	20	2	11	14¾	15	4	2–0	7–0	65.49	333
30" DIA. PIPE, USE ½" DIA. RODS 2"x 1½"x 3/16" ANGLES, 2"x ¼" FLAT.	75	10	15	60	2	50¼	2	35¼	2	20¼	1	100⅝	1	80⅝	1	61	68	84¼	10½	16¼	6	34	7	68	3	84¼	10	15	18 3/32	42	52	22⅝	2	35¼	2	20¼	2	34	2	24	2	14	19¾	20	4	2–5	8–9	105.19	450

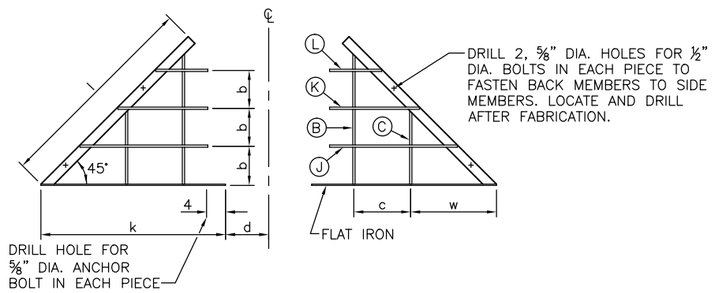

DETAIL OF 2 PIECE BACK

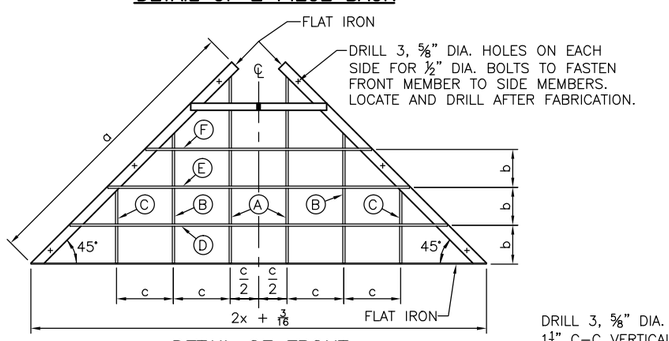

DETAIL OF FRONT

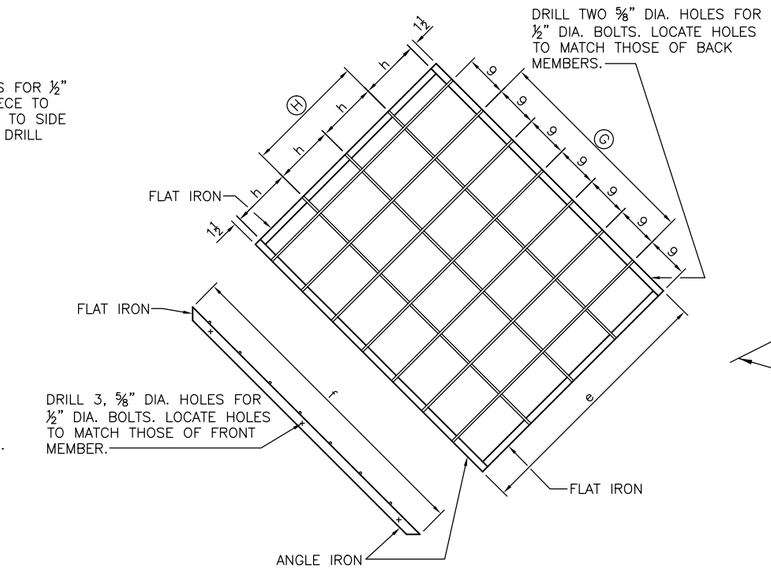

DETAIL OF SIDE

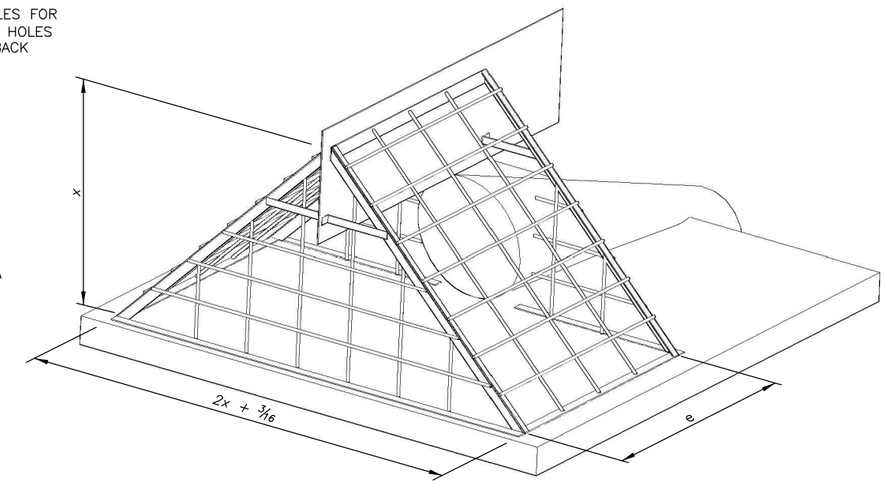

ISOMETRIC VIEW

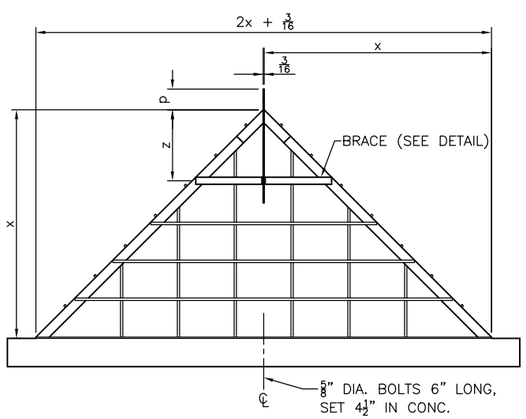

FRONT ELEVATION

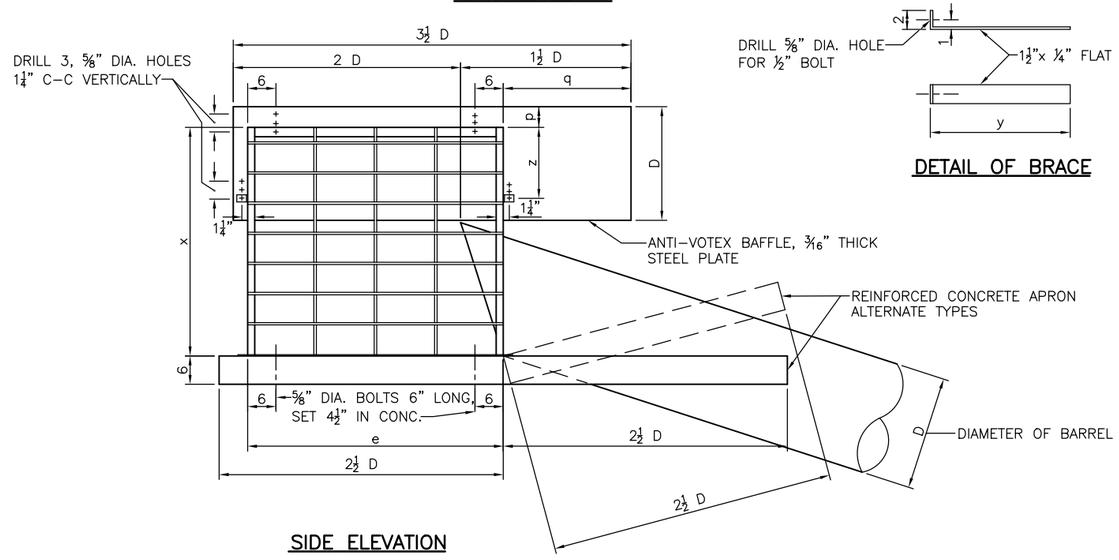

SIDE ELEVATION

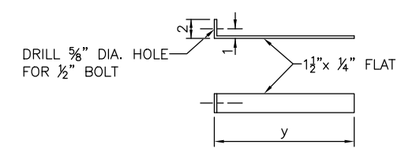

DETAIL OF BRACE

NOTES

1. STANDARDIZED DESIGNS – MUST BE ADOPTED TO THE SPECIFIC SITE.
2. METAL SHALL CONFORM TO THE REQUIREMENTS OF CONSTRUCTION SPECIFICATION 81, METAL FABRICATION AND INSTALLATION OR ENGINEERING STANDARD AND SPECIFICATIONS 378, POND.
3. EACH INDIVIDUAL MEMBER WILL HAVE ALL WELDED CONSTRUCTION.
4. BOLT FRONT, BACK, SIDES, AND BAFFLE WITH ½" DIA. BOLTS.
5. APPROXIMATE WEIGHT DOES NOT INCLUDE BOLTS AND WELDS.
6. USE ⅝" DIA. BOLTS FOR ANCHORING TRASH RACK TO CONCRETE SLAB.

DATE 06–27–60
DESIGNED C.R.H.
DRAWN D.D.D. 05–10–12
CHECKED
APPROVED J.E. ANDREWS, S.C.E. 05–10–12

TRASH RACK AND ANTI–VORTEX BAFFLE FOR HOOD INLET TYPE SPILLWAYS

(REVISED LAST ON 05–12)

NRCS
Natural Resources Conservation Service
United States Department of Agriculture

FILE NO.

DRAWING NO. CO–SSP–59

SHEET 1 OF 1