NOTE:
SEE SHEET 2 OF 2 FOR DIMENSIONS, QUANTITIES AND STEEL.

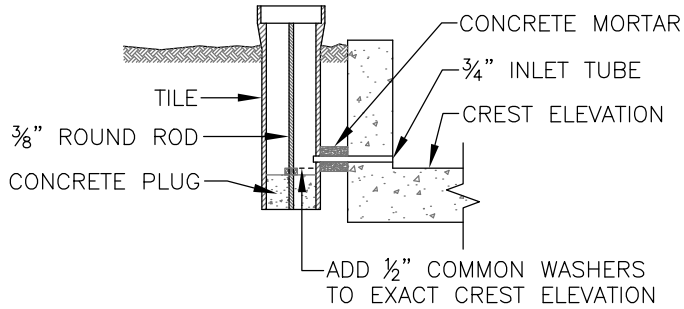

SECTION N–N

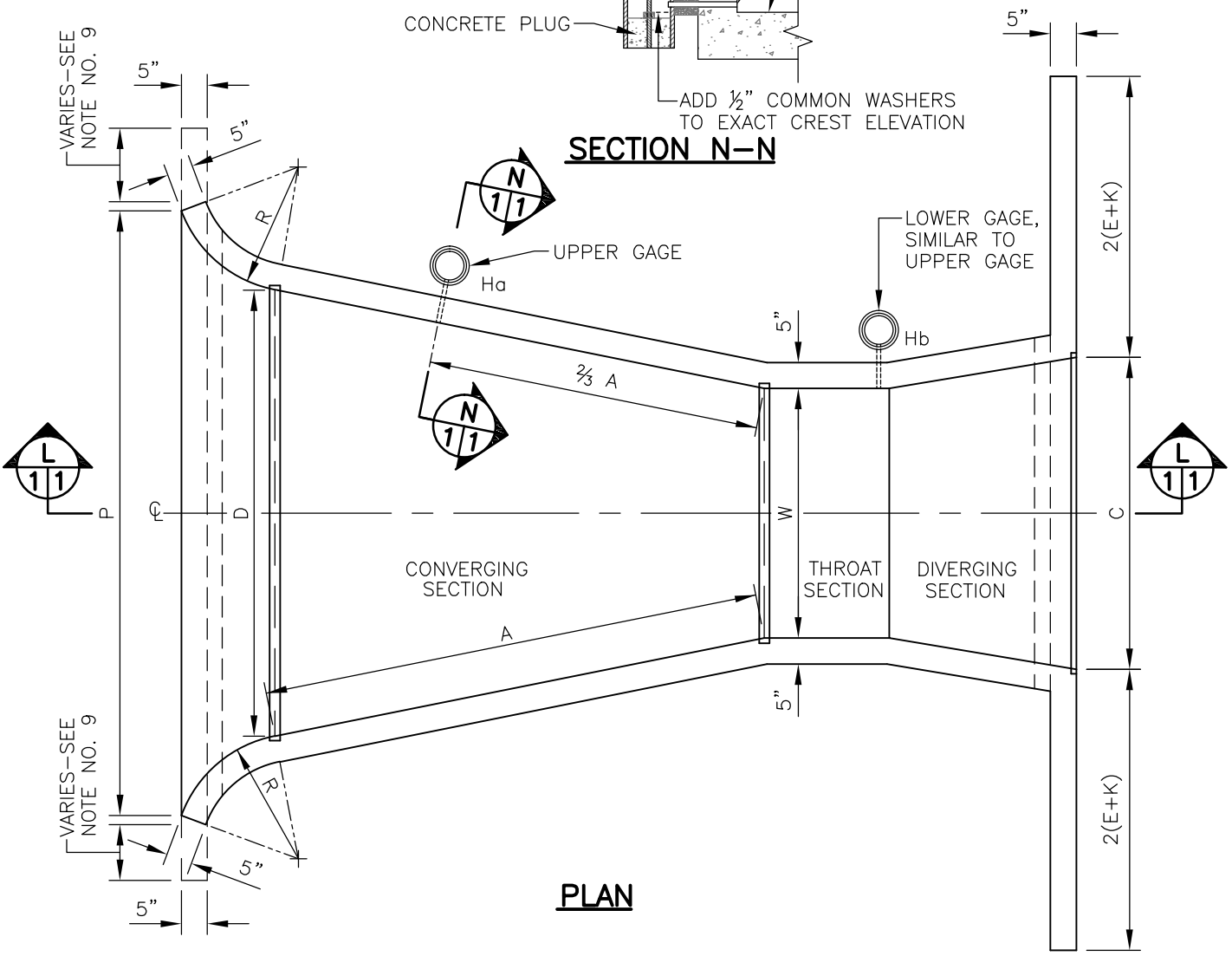

PLAN

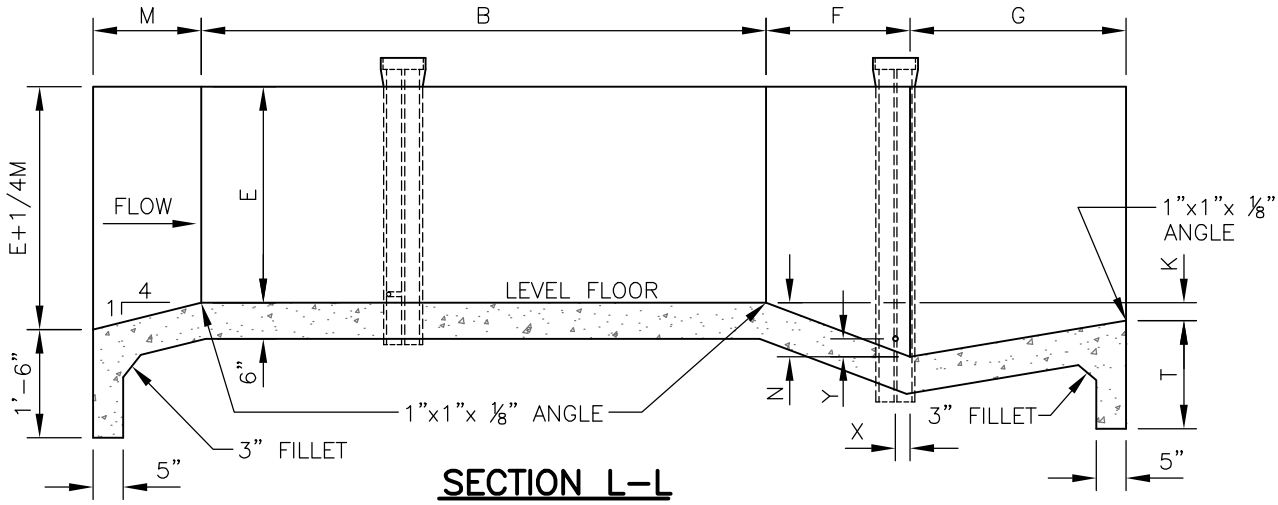

SECTION L–L

NRCS Natural Resources Conservation Service United States Department of Agriculture	REINFORCED CONCRETE PARSHALL FLUME (REVISED LAST ON 03–11)	Designed CRN Date 12–68 Drawn DDD 03–11 Checked Approved J.E. ANDREWS S.C.E. 03–11	File Name Drawing Name CO–SSP–7 Sheet 1 of 2

NOTES

1. EXPOSED CONCRETE EDGES SHALL BE CAMFERED ¾ INCH OR ROUNDED.
2. REINFORCING STEEL MAY BE #3 @ 6 EACH WAY OR #4 @ 9 EACH WAY IN FLOOR, WALLS, AND CUTOFFS.
3. IN SECTIONS WITH A SINGLE MAT OF REINFORCING STEEL, THE STEEL SHALL BE POSITIONED IN THE CENTER OF THE SECTION.
4. REINFORCING BAR SPACING IS CENTER TO CENTER OF BARS. BAR COVER IS CLEAR DISTANCE BETWEEN SURFACE OF BAR AND FACE OF CONCRETE AND SHALL BE 2" FOR FORMED OR TOP SURFACES AND 3" FOR SURFACES PLACED AGAINST EARTH.
5. REINFORCING BARS SHALL BE CONTINUOUS OR SPLICED FROM FLOOR AND WALLS INTO ADJACENT FLOORS AND WALLS.
6. SPLICES OF REINFORCING BARS SHALL PROVIDE AN OVERLAP EQUAL TO AT LEAST 30 TIMES THE BAR DIAMETER, BUT NOT LESS THAN 12".
7. REINFORCING STEEL QUANTITIES BASED ON #4 @ 9.
8. SEE CO-SSP-28 FOR ALTERNATE GAGE WALL.
9. INLET WING WALLS MAY BE LENGTHENED TO CONFORM TO SITE CONDITIONS WHEN APPROVED BY THE ENGINEER OR THE RESPONSIBLE TECHNICIAN.
10. STANDARD DESIGNS – MUST BE ADAPTED TO THE SPECIFIC SITE.
11. CONCRETE SHALL CONFORM TO THE REQUIREMENTS OF CONSTRUCTION SPECIFICATION 31, CONCRETE; CONSTRUCTION SPECIFICATION 32, CONCRETE FOR MINOR STRUCTURES.
12. REINFORCING STEEL SHALL CONFORM TO THE REQUIREMENTS OF CONSTRUCTION SPECIFICATION 34, STEEL REINFORCEMENT.
13. THE STRUCTURE SHALL CONFORM TO THE ENGINEERING STANDARDS AND SPECIFICATIONS 587, STRUCTURE FOR WATER CONTROL WHEN APPROPRIATE.

DIMENSIONS, CAPACITIES AND QUANTITIES OF THE PARSHALL MEASURING FLUME FOR VARIOUS THROAT WIDTHS, W

LETTERS REFER TO DIMENSIONS																	FREE-FLOW CAPACITY		QUANTITIES		
W	A	⅔ A	B	C	D	E	F	G	K	N	R	M	P	X	Y	T	MIN.	MAX.	CONC.	REINF. STEEL	ANGLE LENGTH
FT-IN	FT-IN	FT-IN	FT-IN	FT-IN	FT-IN	FT-IN	FT-IN	FT-IN	IN	IN	FT-IN	FT-IN	FT-IN	IN	IN	FT-IN	SEC.-FT.	SEC.-FT.	CU. YDS.	LBS.	FT.-IN.
0-3	1-6⅜	1-0¼	1-6	0-7	0-10 3/16	2-0	0-6	1-0	1	2¼	1-4	1-0	2-6¼	1	1½	1-0	0.03	1.9	0.78	95	2-9
0-6	2-0 7/16	1-4 5/16	2-0	1-3½	1-3⅝	2-0	1-0	2-0	3	4½	1-4	1-0	2-11½	2	3	1-0	0.05	3.9	1.12	135	4-2
0-9	2-10⅝	1-11⅛	2-10	1-3	1-10⅝	2-6	1-0	1-6	3	4½	1-4	1-0	3-6½	2	3	1-6	0.09	8.9	1.53	184	4-11
1-0	4-6	3-0	4-4⅞	2-0	2-9¼	3-0	2-0	3-0	3	9	1-8	1-3	4-10¾	2	3	1-6	0.11	16.1	2.64	321	6-10
1-6	4-9	3-2	4-7⅞	2-6	3-4⅜	3-0	2-0	3-0	3	9	1-8	1-3	5-6	2	3	1-6	0.15	24.6	2.80	334	8-5
2-0	5-0	3-4	4-10⅞	3-0	3-11½	3-0	2-0	3-0	3	9	1-8	1-3	6-1	2	3	1-6	0.42	33.1	2.97	352	10-0
3-0	5-6	3-8	5-4¾	4-0	5-1⅞	3-0	2-0	3-0	3	9	1-8	1-3	7-3½	2	3	1-6	0.61	50.4	3.32	390	13-2
4-0	6-0	4-0	5-10⅝	5-0	6-4¼	3-0	2-0	3-0	3	9	2-0	1-6	8-10¾	2	3	1-6	1.3	67.9	3.78	450	16-5
5-0	6-6	4-4	6-4½	6-0	7-6⅝	3-0	2-0	3-0	3	9	2-0	1-6	10-1¼	2	3	1-6	1.6	85.6	4.18	482	19-7
6-0	7-0	4-8	6-10⅜	7-0	8-9	3-0	2-0	3-0	3	9	2-0	1-6	11-3½	2	3	1-6	2.6	103.5	4.59	527	22-9
7-0	7-6	5-0	7-4¼	8-0	9-11⅜	3-0	2-0	3-0	3	9	2-0	1-6	12-6	2	3	1-6	3.0	121.4	5.01	572	26-0
8-0	8-0	5-4	7-10⅛	9-0	11-1¾	3-0	2-0	3-0	3	9	2-0	1-6	13-8¼	2	3	1-6	3.5	139.5	5.48	622	29-2

TABLE 1

W FT. INS.	CONCRETE *CU. YDS.	REINFORCING STEEL LBS.
0-3	0.06	7
0-6	0.08	9
0-9	0.09	10
1-0	0.13	15
1-6	0.13	15
2-0	0.14	15
3-0	0.14	16
4-0	0.15	16
5-0	0.15	17
6-0	0.15	17
7-0	0.16	18
8-0	0.16	18

NOTE:
TABLE 1 SHOWS CHANGES IN CONCRETE AND STEEL PER 3 INCHES OF WALL HEIGHT.

* OUTLET WINGWALLS ARE NOT TO BE SHORTENED WHEN USING VALUES FROM THIS TABLE.

TABLE 2

W FT. INS.	CONCRETE *CU. YDS.	REINFORCING *STEEL LBS.
0-3	0.058	6.5
0-6	0.058	6.5
0-9	0.066	7.4
1-0	0.074	8.3
1-6	0.074	8.3
2-0	0.074	8.3
3-0	0.074	8.3
4-0	0.075	8.4
5-0	0.075	8.4
6-0	0.075	8.4
7-0	0.075	8.4
8-0	0.075	8.4

NOTE:
TABLE 2 SHOWS CHANGES IN CONCRETE AND STEEL FOR A 12 INCH INCREASE IN LENGTH OF INLET WINGWALL.

* THESE VALUES DO NOT REFLECT CHANGES IN WALL HEIGHT. A 12"x5"x3" BLOCK OF CONCRETE HAS 0.004 CU. YDS. AND 0.45 LBS. OF REINFORCING STEEL.

NRCS
Natural Resources Conservation Service
United States Department of Agriculture

REINFORCED CONCRETE PARSHALL FLUME

(REVISED LAST ON 02-11)

Designed CRN Date 07-69
Drawn DDD 02-11
Checked
Approved J.E. ANDREWS 02-11
S.C.E.

File Name
Drawing Name CO-SSP-7
Sheet 2 of 2