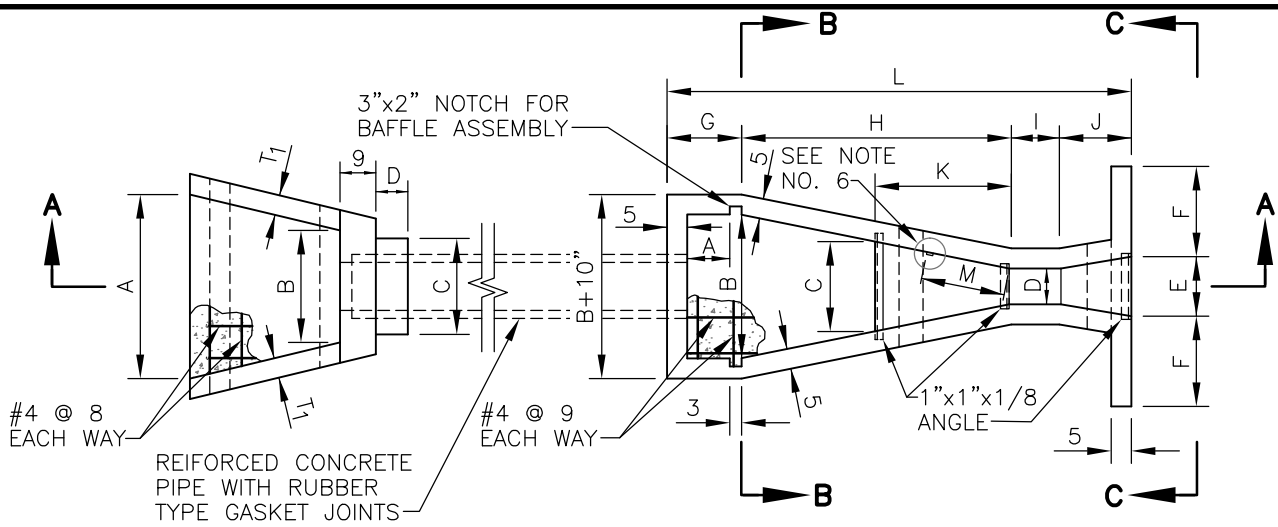

PLAN VIEW OF TURNOUT AND PARSHALL FLUME

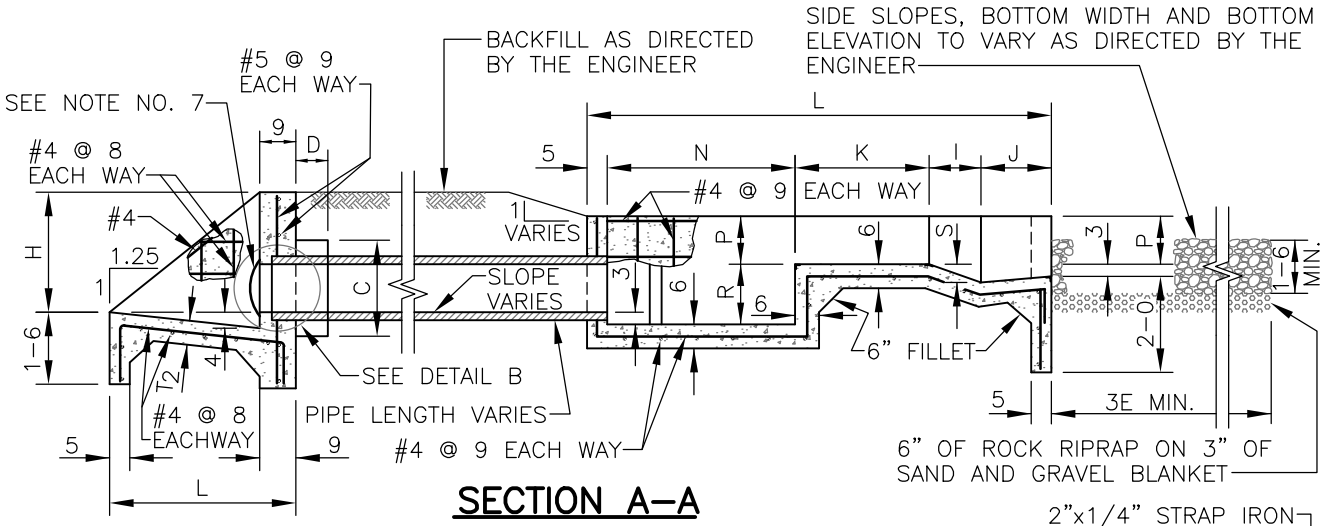

SECTION A–A

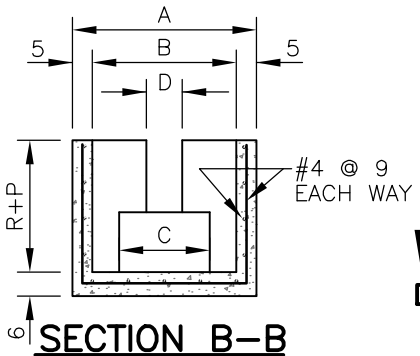

SECTION B–B

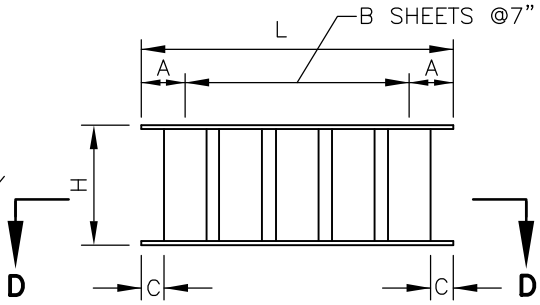

BAFFLE ASSEMBLY DETAIL

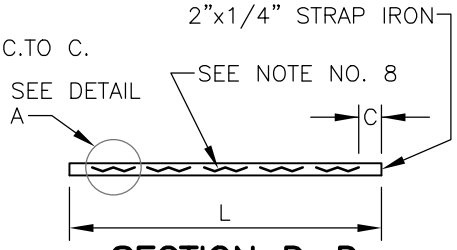

SECTION D–D

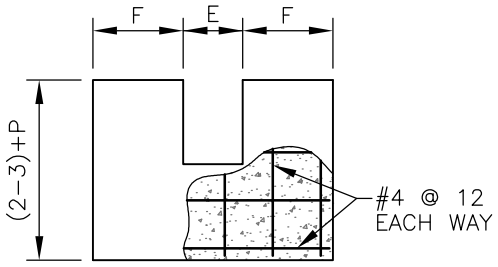

SECTION C–C

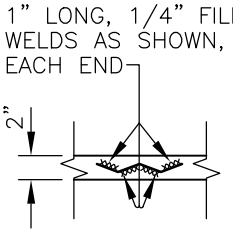

DETAIL A

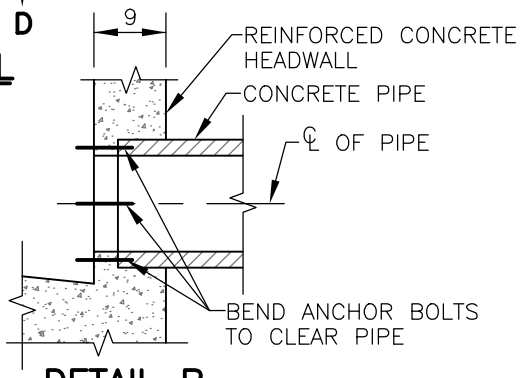

DETAIL B

NO SCALE

NRCS
Natural Resources Conservation Service
United States Department of Agriculture

REINFORCED CONCRETE DITCH TURNOUT AND PARSHALL FLUME

(REVISED LAST ON 12–09)

		Date
Designed	REJ	4–68
Drawn	DDD	12–09
Checked		
Approved	J.E. ANDREWS S.C.E.	12–09

File Name

Drawing Name CO–SSP–9

Sheet 1 of 2

DIMENSIONS, CAPACITIES AND QUANTITIES OF TURNOUT WITH PARSHALL FLUME FOR VARIOUS TYPES

TYPE	LETTERS REFER TO DIMENSIONS																																		QUANTITIES	
	INLET								OUTLET AND PARSHALL FLUME													BAFFLE ASSEMBLY									PIPE DIA.	DESIGN CAPACITY	CONCRETE	REINFORC-ING STEEL
	A	B	C	D	H	L	T_1	T_2	A	B	C	D	E	F	G	H	I	J	K	L	M	N	P	R	S	A	B	C	H	L				
	FT-IN	FT-IN	FT-IN	INS	FT-IN	FT-IN	INS	INS	FT-IN	FT-IN	FT-IN	FT-IN	FT-IN	FT-IN	FT-IN	FT-IN	FT-IN	FT-IN	FT-IN	FT-IN	FT-IN	FT-IN	FT-IN	FT-IN	INS	INS	QUANITY	INS	FT-IN	FT-IN	INS	C.F.S.	CU. YDS.	LBS.
12-9	3-10	2-4			2-6	3-10½	5	6	0-10	3-0	1-10⅝	0-9	1-3	1-10½	1-6⅝	5-7⅜	1-0	1-6	2-10	9-8	1-11⅛	3-11	1-6	1-3	4½	5½	5	2⅞	1-3	3-3	12	4	2.31	275
	3-10	2-4			3-6	5-1½	5	6	0-10	3-0	1-10⅝	0-9	1-3	1-10½	1-6⅝	5-7⅜	1-0	1-6	2-10	9-8	1-11⅛	3-11	1-6	1-3	4½	5½	5	2⅞	1-3	3-3	12	4	2.61	314
	3-10	2-4			4-6	6-4½	5	6	0-10	3-0	1-10⅝	0-9	1-3	1-10½	1-6⅝	5-7⅜	1-0	1-6	2-10	9-8	1-11⅛	3-11	1-6	1-3	4½	5½	5	2⅞	1-3	3-3	12	4	2.95	357
	3-10	2-4			5-6	7-7½	6	7	0-10	3-0	1-10⅝	0-9	1-3	1-10½	1-6⅝	5-7⅜	1-0	1-6	2-10	9-8	1-11⅛	3-11	1-6	1-3	4½	5½	5	2⅞	1-3	3-3	12	4	3.63	414
	3-10	2-4			6-6	8-10½	6	7	0-10	3-0	1-10⅝	0-9	1-3	1-10½	1-6⅝	5-7⅜	1-0	1-6	2-10	9-8	1-11⅛	3-11	1-6	1-3	4½	5½	5	2⅞	1-3	3-3	12	4	4.08	465
15-9	4-0	2-6			2-7½	4-0⅜	5	6	0-10	3-0	1-10⅝	0-9	1-3	1-10½	1-6⅝	5-7⅜	1-0	1-6	2-10	9-8	1-11⅛	3-11	1-6	1-6	4½	5½	5	2⅞	1-6	3-3	15	4	2.39	285
	4-0	2-6			3-7½	5-3⅜	5	6	0-10	3-0	1-10⅝	0-9	1-3	1-10½	1-6⅝	5-7⅜	1-0	1-6	2-10	9-8	1-11⅛	3-11	1-6	1-6	4½	5½	5	2⅞	1-6	3-3	15	4	2.71	325
	4-0	2-6			4-7½	6-6⅜	5	6	0-10	3-0	1-10⅝	0-9	1-3	1-10½	1-6⅝	5-7⅜	1-0	1-6	2-10	9-8	1-11⅛	3-11	1-6	1-6	4½	5½	5	2⅞	1-6	3-3	15	4	3.06	368
	4-0	2-6			5-7½	7-9⅜	6	7	0-10	3-0	1-10⅝	0-9	1-3	1-10½	1-6⅝	5-7⅜	1-0	1-6	2-10	9-8	1-11⅛	3-11	1-6	1-6	4½	5½	5	2⅞	1-6	3-3	15	4	3.73	425
	4-0	2-6			6-7½	9-0⅜	7	8	0-10	3-0	1-10⅝	0-9	1-3	1-10½	1-6⅝	5-7⅜	1-0	1-6	2-10	9-8	1-11⅛	3-11	1-6	1-6	4½	5½	5	2⅞	1-6	3-3	15	4	4.60	501
15-9	4-0	2-6			2-7½	4-0⅜	5	6	0-10	3-0	1-10⅝	0-9	1-3	1-10½	1-6⅝	5-7⅜	1-0	1-6	2-10	9-8	1-11⅛	3-11	2-0	1-6	4½	5½	5	2⅞	1-6	3-3	15	6	2.59	311
	4-0	2-6			3-7½	5-3⅜	5	6	0-10	3-0	1-10⅝	0-9	1-3	1-10½	1-6⅝	5-7⅜	1-0	1-6	2-10	9-8	1-11⅛	3-11	2-0	1-6	4½	5½	5	2⅞	1-6	3-3	15	6	2.91	350
	4-0	2-6			4-7½	6-6⅜	5	6	0-10	3-0	1-10⅝	0-9	1-3	1-10½	1-6⅝	5-7⅜	1-0	1-6	2-10	9-8	1-11⅛	3-11	2-0	1-6	4½	5½	5	2⅞	1-6	3-3	15	6	3.26	393
	4-0	2-6			5-7½	7-9⅜	6	7	0-10	3-0	1-10⅝	0-9	1-3	1-10½	1-6⅝	5-7⅜	1-0	1-6	2-10	9-8	1-11⅛	3-11	2-0	1-6	4½	5½	5	2⅞	1-6	3-3	15	6	3.93	450
	4-0	2-6			6-7½	9-0⅜	7	8	0-10	3-0	1-10⅝	0-9	1-3	1-10½	1-6⅝	5-7⅜	1-0	1-6	2-10	9-8	1-11⅛	3-11	2-0	1-6	4½	5½	5	2⅞	1-6	3-3	15	6	4.80	515
15-12	4-0	2-6			2-7½	4-0⅜	5	6	0-10	3-0	2-9¼	1-0	2-0	2-0	3-9⅛	4-11¾	2-0	3-0	4-4⅞	13-8⅞	3-0	3-11	1-9	1-6	9	5½	5	2⅞	1-6	3-3	15	6	3.08	367
	4-0	2-6			3-7½	5-3⅜	5	6	0-10	3-0	2-9¼	1-0	2-0	2-0	3-9⅛	4-11¾	2-0	3-0	4-4⅞	13-8⅞	3-0	3-11	1-9	1-6	9	5½	5	2⅞	1-6	3-3	15	6	3.40	406
	4-0	2-6			4-7½	6-6⅜	5	6	0-10	3-0	2-9¼	1-0	2-0	2-0	3-9⅛	4-11¾	2-0	3-0	4-4⅞	13-8⅞	3-0	3-11	1-9	1-6	9	5½	5	2⅞	1-6	3-3	15	6	3.75	449
	4-0	2-6			5-7½	7-9⅜	6	7	0-10	3-0	2-9¼	1-0	2-0	2-0	3-9⅛	4-11¾	2-0	3-0	4-4⅞	13-8⅞	3-0	3-11	1-9	1-6	9	5½	5	2⅞	1-6	3-3	15	6	4.42	506
	4-0	2-6			6-7½	9-0⅜	7	8	0-10	3-0	2-9¼	1-0	2-0	2-0	3-9⅛	4-11¾	2-0	3-0	4-4⅞	13-8⅞	3-0	3-11	1-9	1-6	9	5½	5	2⅞	1-6	3-3	15	6	5.29	571
18-12	4-6	3-0	2-10	8	2-9	4-2¼	5	6	1-0	3-8	2-9¼	1-0	2-0	2-0	3-4¼	6-7⅝	2-0	3-0	4-4⅞	14-11⅞	3-0	5-2	2-0	1-9	9	6	6	3⅜	1-9	3-11	18	8	3.85	459
	4-6	3-0	2-10	8	3-9	5-5¼	5	6	1-0	3-8	2-9¼	1-0	2-0	2-0	3-4¼	6-7⅝	2-0	3-0	4-4⅞	14-11⅞	3-0	5-2	2-0	1-9	9	6	6	3⅜	1-9	3-11	18	8	4.09	490
	4-6	3-0	2-10	8	4-9	6-8¼	5	6	1-0	3-8	2-9¼	1-0	2-0	2-0	3-4¼	6-7⅝	2-0	3-0	4-4⅞	14-11⅞	3-0	5-2	2-0	1-9	9	6	6	3⅜	1-9	3-11	18	8	4.57	550
	4-6	3-0	2-10	8	5-9	7-11¼	6	7	1-0	3-8	2-9¼	1-0	2-0	2-0	3-4¼	6-7⅝	2-0	3-0	4-4⅞	14-11⅞	3-0	5-2	2-0	1-9	9	6	6	3⅜	1-9	3-11	18	8	5.29	607
	4-6	3-0	2-10	8	6-9	9-2¼	7	8	1-0	3-8	2-9¼	1-0	2-0	2-0	3-4¼	6-7⅝	2-0	3-0	4-4⅞	14-11⅞	3-0	5-2	2-0	1-9	9	6	6	3⅜	1-9	3-11	18	8	6.21	673
18-18	4-6	3-0	2-10	8	2-9	4-2¼	5	6	1-0	3-8	3-4⅜	1-6	2-6	2-0	4-10	5-4⅞	2-0	3-0	4-4⅞	15-2⅞	3-2	5-2	1-6	1-9	9	6	6	3⅜	1-9	3-11	18	8	3.79	449
	4-6	3-0	2-10	8	3-9	5-5¼	5	6	1-0	3-8	3-4⅜	1-6	2-6	2-0	4-10	5-4⅞	2-0	3-0	4-4⅞	15-2⅞	3-2	5-2	1-6	1-9	9	6	6	3⅜	1-9	3-11	18	8	4.03	480
	4-6	3-0	2-10	8	4-9	6-8¼	5	6	1-0	3-8	3-4⅜	1-6	2-6	2-0	4-10	5-4⅞	2-0	3-0	4-4⅞	15-2⅞	3-2	5-2	1-6	1-9	9	6	6	3⅜	1-9	3-11	18	8	4.51	541
	4-6	3-0	2-10	8	5-9	7-11¼	6	7	1-0	3-8	3-4⅜	1-6	2-6	2-0	4-10	5-4⅞	2-0	3-0	4-4⅞	15-2⅞	3-2	5-2	1-6	1-9	9	6	6	3⅜	1-9	3-11	18	8	5.23	597
	4-6	3-0	2-10	8	6-9	9-2¼	7	8	1-0	3-8	3-4⅜	1-6	2-6	2-0	4-10	5-4⅞	2-0	3-0	4-4⅞	15-2⅞	3-2	5-2	1-6	1-9	9	6½	6	3⅜	1-9	3-11	18	8	6.15	663
21-18	5-0	3-6	3-2½	8	2-10½	4-4⅛	5	6	1-2	5-0	3-4⅜	1-6	2-6	2-0	1-10	8-8⅞	2-0	3-0	4-4⅞	15-6⅞	3-2	5-6	1-6	2-0	9	7½	8	4⅜	2-0	5-3	21	8	4.19	494
	5-0	3-6	3-2½	8	3-10½	5-7⅛	5	6	1-2	5-0	3-4⅜	1-6	2-6	2-0	1-10	8-8⅞	2-0	3-0	4-4⅞	15-6⅞	3-2	5-6	1-6	2-0	9	7½	8	4⅜	2-0	5-3	21	8	4.56	541
	5-0	3-6	3-2½	8	4-10½	6-10⅛	5	6	1-2	5-0	3-4⅜	1-6	2-6	2-0	1-10	8-8⅞	2-0	3-0	4-4⅞	15-6⅞	3-2	5-6	1-6	2-0	9	7½	8	4⅜	2-0	5-3	21	8	4.98	594
	5-0	3-6	3-2½	8	5-10½	8-1⅛	6	7	1-2	5-0	3-4⅜	1-6	2-6	2-0	1-10	8-8⅞	2-0	3-0	4-4⅞	15-6⅞	3-2	5-6	1-6	2-0	9	7½	8	4⅜	2-0	5-3	21	8	5.74	654
	5-0	3-6	3-2½	8	6-10½	9-4⅜	7	8	1-2	5-0	3-4⅜	1-6	2-6	2-0	1-10	8-8⅞	2-0	3-0	4-4⅞	15-6⅞	3-2	5-6	1-6	2-0	9	7½	8	4⅜	2-0	5-3	21	8	6.72	724

NOTES

1. EXPOSED CONCRETE EDGES SHALL BE CHAMFERED 3/4 INCH OR ROUNDED.
2. REINFORCING BAR SPACING IS CENTER TO CENTER OF BARS. BAR COVER IS CLEAR DISTANCE BETWEEN SURFACE OF BAR AND FACE OF CONCRETE AND SHALL BE 2" FOR FORMED AND TOP SURFACES AND 3" FOR SURFACES PLACED AGAINST EARTH, UNLESS OTHER WISE SHOWN.
3. IN SECTIONS WITH A SINGLE MAT OF REINFORCING STEEL, THE STEEL SHALL BE POSITIONED IN THE CENTER OF THE SECTION, UNLESS OTHER WISE SHOWN.
4. REINFORCING BARS SHALL BE CONTINUOUS OR SPLICED FROM FLOOR AND WALLS INTO ADJACENT FLOORS, WALLS AND SLOPES.
5. BAR SPLICES SHALL BE STAGGERED WITH BARS LAPPED AT LEAST 30 BAR DIAMETERS, BUT NOT LESS THAN 12 INCHES.
6. INSTALL STAFF GAGE AS DIRECTED BY THE ENGINEER.
7. INSTALL A SLIDE GATE (ARMCO MODEL 101C OR EQUAL) AS RECOMMENDED BY THE MANUFACTURER. USE SPIGOT BACK GATE (A FLAT BACK GATE MAY BE USED WHEN APPROVED BY THE ENGINEER).
8. 12 GA., GALV. STD. CORRUGATED SHEETS, 5-1/3" WIDE, MAY BE REPLACED BY A 5"x 5/16" BAR WHEN APPROVED BY THE ENGINEER.
9. TYPE 15-12 MEANS A 15-INCH DIAMETER SLIDE GATE AND A 15-INCH DIAMETER PIPE WITH A 12-INCH WIDE PARSHALL FLUME.
10. STANDARDIZED DESIGNS - MUST BE ADAPTED TO THE SPECIFIC SITE.
11. CONCRETE SHALL CONFORM TO THE REQUIREMENTS OF CONSTRUCTION SPECIFICATION 31, CONCRETE OR 32, CONCRETE FOR MINOR STRUCTURES.
12. REINFORCING STEEL SHALL CONFORM TO THE REQUIREMENTS OF CONSTRUCTION SPECIFICATION 34, STEEL REINFORCEMENT.
13. THE STRUCTURE SHALL CONFORM TO ENGINEERING STANDARD AND SPECIFICATIONS 587, 'STRUCTURE FOR WATER CONTROL' WHEN APPROPRIATE.

NRCS
Natural Resources Conservation Service
United States Department of Agriculture

REINFORCED CONCRETE DITCH TURNOUT AND PARSHALL FLUME

(REVISED LAST ON 12-09)

Designed REJ — Date 4-68
Drawn DDD — 12-09
Checked
Approved J.E. ANDREWS — 12-09
S.C.E.

File Name
Drawing Name CO-SSP-9
Sheet 2 of 2